SHIMADZU

INSTRUCTION MANUAL
PharmaSpec
UV-1700
SERIES
User's System Guide

SHIMADZU CORPORATION

KYOTO JAPAN

206-94783

INSTRUCTION MANUAL
USER'S SYSTEM GUIDE
UV-1700
SHIMADZU
SPECTROPHOTOMETER

P/N 206-55401-91
206-55401-92
206-55401-93
206-55401-94
206-55401-34

Read the instruction manual thoroughly before you use the product. Save this instruction manual with care so that you can use it any time you need it.

SHIMADZU CORPORATION
ANALYTICAL & MEASURING INSTRUMENTS DIVISION
KYOTO, JAPAN

Shimadzu Corporation provides this publication "as is" without warranty of any kind, either express or implied, including, but not limited to the implied warranties of merchantability or fitness for a particular purpose.

All rights are reserved, including those to reproduce this publication or parts thereof in any form without permission in writing from Shimadzu Corporation.

Information in this publication is subject to change without notice and does not represent a commitment on the part of the vendor.

Any errors or omissions which may have occurred in this publication despite the utmost care taken in its production will be corrected as soon as possible, but not necessarily immediately upon detection.

Copyright© Shimadzu Corporation 2001.

Precautions for Safe Operation

UV-1700 is a UV-Visible Spectrophotometer.

To operate this equipment safely, strictly observe the following precautions. If not observed, the safety may be compromised.

1. Do not use the equipment for any purpose other than the above-mentioned types of analysis.
2. Follow the procedures described in the instruction manual.
3. Observe all warnings and cautions.
4. Do not disassemble or modify the equipment without the express approval of an authorized Shimadzu Representative.
5. For internal repair of the equipment, contact your Shimadzu Representative.

In this manual, the meaning of caution signs are provided as follows.

WARNING	**indicates a potentially hazardous situation which, if not avoided, could result in death, serious injury or moderate injury.**
CAUTION	**indicates a potentially hazardous situation which, if not avoided, could result in minor injury, or may result in machine damage.**
NOTE	**is used to increase the work efficiency or to help comprehension of the description.**

In this manual, the meaning of safety symbols are provided as follows.

Voltage is dangerously high.

Hot Surface

Warning labels indicated on the equipment

WARNING

HOT SURFACE

The light source and the housing gets very hot. Turn off the power switch of the unit, allow the unit to cool sufficiently, and replace the light source.

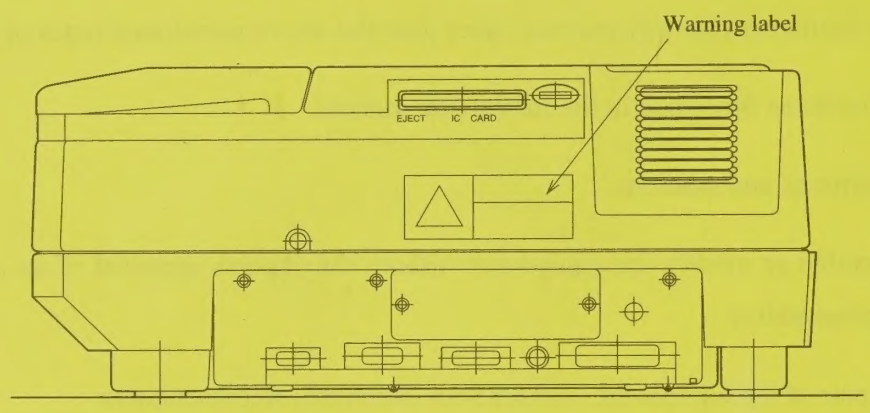

Fig. 1 UV-1700

WARNING

ELECTRICAL SHOCK

There is a possibility of electric shock. Before replacing the fuse, turn off the power and remove the power cord.

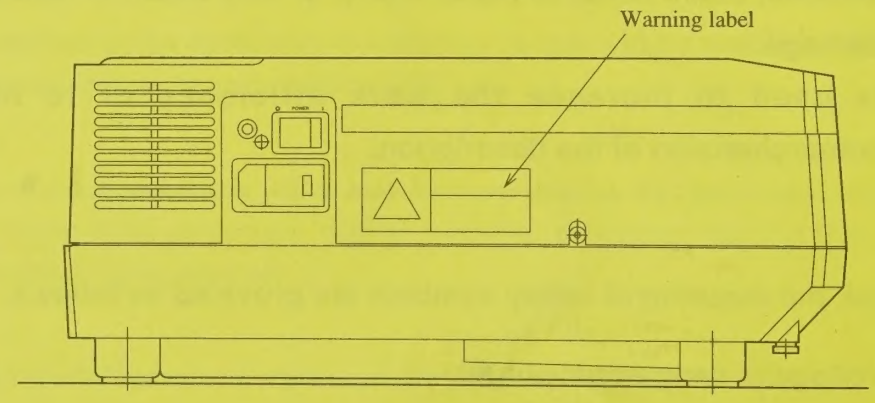

Fig. 2 UV-1700

Symbols indicated on the unit

Symbol	Contens
~	Indicates current (a. c.).
⏚	Indicates protective conductor terminal.
|	Indicates power ON.
○	Indicates power OFF.

Regulatory Information

For Europe:

The product complies with the requirements of the EMC Directive 89/336/EEC amended by 92/31/EEC, 93/68/EEC, and Low Voltage Directive 73/23/EEC amended by 93/68/EEC.

Product name	: UV-Visible Spectrophotometer
Model Name	: UV-1700
Manufacturer	: SHIMADZU CORPORATION ANALYTICAL INSTRUMENTS DIVISION
Address	: 1, NISHINOKYO-KUWABARACHO, NAKAGYO-KU, KYOTO, 604-8511, JAPAN
Authorized Representative in EU	: SHIMADZU Deutschland GmbH
Address	: Albert-Hahn-Strasse 6-10, D-47269 Duisuburg F.R.Germany

Digitized by the Internet Archive
in 2026 with funding from
University of Toronto

https://archive.org/details/uoftmanuals004

CONTENTS

1. Installation

1.1 Parts Inspection 1-2
1.2 Installation Site 1-4
1.2.1 Ventilation 1-4
1.2.2 Cleaning the instrument 1-4
1.3 Connecting Power 1-5
1.3.1 Power Supply 1-5
1.3.2 Ground 1-5
1.3.3 Connecting the Power Cable 1- 5
1.4 Turning ON the Power and Initialization 1-7
1.5 Installation Function Check 1-8
1.5.1 Baseline Flatness 1-8
1.5.2 Wavelength Accuracy 1-10
1.6 Electro Magnetic Compatibility 1-13

2. Construction

2.1 Exterior View 2-2
2.1.1 Front and Top Views 2-2
2.1.2 Left Side ViDes 2-3
2.1.3 Right Side View 2-4
2.2 Sample Compartment 2-6
2.3 Keyboard 2-7
2.4 Light Source Compartment 2-9

3. Maintenance & Checking

3.1 Daily Maintenance & Periodic Maintenance 3-2
3.2 Initialization & Error Display 3-3
3.3 Troubleshooting 3-5
3.4 Replacing Light Source 3-8
3.4.1 Light Source Specifications 3-8
3.4.2 Light Source Replacement Procedure 3-9
3.5 Replacing Fuse 3-13
3.6 Cleaning the Unit 3-15
3.7 Precaution During Transportation of the Unit 3-16
3.8 List of Consumable Part, Spare Parts 3-17

4. Spectrophotometer Basics

4.1 What is Light? 4-2
4.2 Ultraviolet/Visible Spectrum 4-4
4.3 Bouguer-Beer's Law 4-5
4.4 Qualitative Analysis and Quantitative Analysis 4-6
4.4.1 Spectrum and chemical structure (Qualitative analysis) 4-6
4.4.2 Colorimetric analysis (Quantitative analysis) 4-6
4.5 Calibration Curve 4-7
4.6 Solvent Selection 4-8
4.7 Calibration Curve Curvature 4-9
4.8 Spectrophotometer Types 4-11
4.8.1 Single and double beam configurations 4-11
4.8.2 Single and double detector configuration 4-12
4.8.3 Single monochromator and double monochromator 4-13

5. Photometry System

5.1 Optical System 5-2
5.2 Electrical System 5-4

6. Specifications

6.1 Hardware Specifications 6-2
6.2 Software Specifications 6-4

Appendix Optional Accessories

Appendix A Sample compartment (Operation of Multicell and Sipper) App-2
Appendix B Printer App-14
Appendix C Program Pack / Data Pack App-17
Appendix D List of Cells App-20

Index

Chapter 1 Installation

CONTENTS

1.1 Parts Inspection 1-2
1.2 Installation Site 1-4
1.2.1 Ventilation 1-4
1.2.2 Cleaning the instrument 1-4
1.3 Connecting Power 1-5
1.3.1 Power Supply 1-5
1.3.2 Ground 1-5
1.3.3 Connecting the Power Cable 1-5
1.4 Turning ON the Power and Initialization 1-7
1.5 Installation Function Check 1-8
1.5.1 Baseline Flatness 1-8
1.5.2 Wavelength Accuracy 1-10
1.6 Electro Magnetic Compatibility 1-13

1.1 Parts Inspection

This instrument is shipped with the following items. Upon opening the shipping container, confirm that all of the listed parts are accounted for in your shipment.

Table 1.1.1 Standard Contents

	Description		Part No.	Qty.	Comments
1	Spectrophotometer (One of the following) For 100V, 120V, 220V, 240V sites For 230V site		 206-67010 206-67010-01	1	
2	Standard Accessories (One of the following) For 100V, 120V sites For 220V, 230V, 240V site		 206-67099 206-67099-01	1	
	2-1	AC Power Cord	071-60814-01 or 071-60814-05	1	(for 100, 120V) (for 220, 230, 240V)
	2-2	Fuses	072-02004-22 or 072-02004-19	2	4.0A (for100, 120V) 2.0A (for 220, 230, 240V)
	2-3	Ground Adapter	071-60803-01	1	(for 100, 120V)
3	Instruction Manual		206-94783	1	User's System Guide
4	Instruction Manual		206-94785	1	Operation Guide

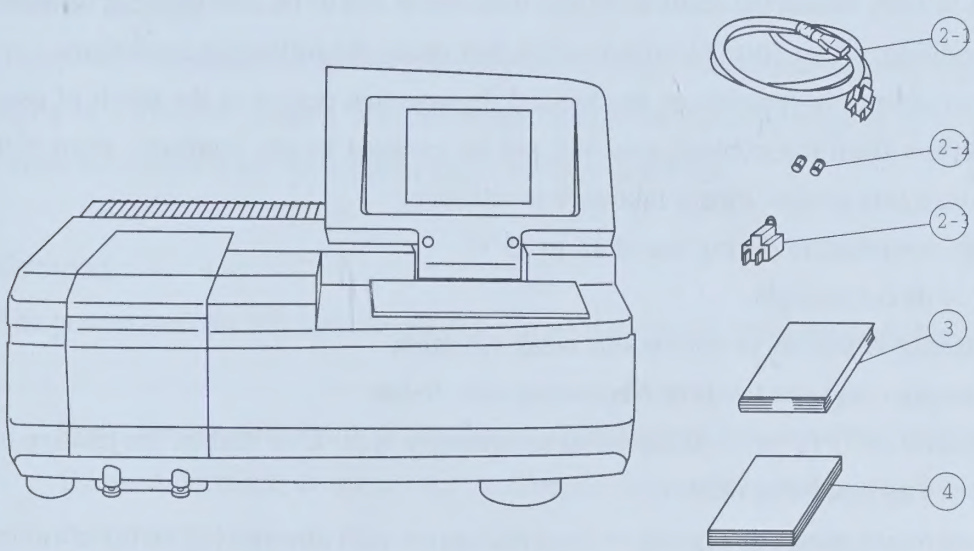

Fig.1.1.1 Standard Contents

Note	A thin protective film has been applied to the surface of the keyboard. This film will not be a hindrance if the keyboard is used with it in place, but if the film begins to peel during use and makes the keyboard difficult to see, peel it entirely from the surface.

1.2 Installation Site

In order to fully utilize the features of this instrument and to be able to use it for a long time in a stable condition, please install it in a location that meets the following conditions.

Any deterioration in function or mechanical damage that occurs as the result of use in a location that differs from these conditions will not be covered by the warranty, even if they occur within the warranty period. Please take care in advance.

- Room temperature during use of 15 to 35°C.
- Out of direct sunlight.
- No strong vibration, or continuous weak vibration.
- No strong magnetic fields or electromagnetic fields.
- Humidity of 35 to 80%. (If the room temperature is 30°C or higher, the relative humidity must be no more than 70%.)
- No corrosive gases, or organic or inorganic gases with absorptivity in the ultraviolet range.
- Low amounts of dust.

The dimensions of the UV-1700 are 550mm×470mm×380mm (220mm at closing LCD unit) (W×D×H). The minimum floor space required for installation is 700mm×500mm (W×D). In addition, do not place anything in front of the fan on the left side as it may hinder ventilation.

The UV-1700 weighs 17kg. Install the unit on a flat surface that will support this weight.

1.2.1 Ventilation

When using organic solvent and the equivalent as a sample, be sure to maintain sufficient ventilation.

1.2.2 Cleaning the instrument

The main unit cover and the sample compartment inside must be kept clean.

Clean this instrument with the following procedure.

- Turn OFF the power of the instrument and pull out the power cable from the outlet before starting the cleaning.
- Wipe off the pollution on the main unit cover and inside the sample compartment with a piece of soft cloth moistened with water or neutral detergent. However, do not touch the window plate through which light passes.
- Do not touch the light source chamber inside.
- Avoid wiping with too wet cloth or dropping liquid inside the sample compartment.

Caution	Do not wet the instrument with water or organic solvent. If the instrument is wet with water or organic solvent, an electrical failure or a functional failure of the instrument may occur.

1.3 Connecting Power

1.3.1 Power Supply

The power consumption of this instrument is 130VA. Please use a power supply with a capacity of 130VA or greater. The allowable voltage fluctuation range is 10%. If the voltage fluctuates more than 10%, please use a voltage stabilizer.

1.3.2 Ground

The power cord for this instrument is a 3-wire type which includes a ground wire.

Note If the electrical outlet is of the 2-wire type, be sure to ground the instrument from the earth terminal of the power cord or the ground terminal on the left side of the instrument.

1.3.3 Connecting the Power Cable

(1) Check to see that the power switch on the unit is OFF (so that ○ is pushed in).

(2) Check to see that the voltage setting switch display is the power supply voltage being used.

If the power supply voltage displayed is different from the one being used, use a standard screwdriver to open the fuse holder lid, remove the circular plug and insert the plug in the position that display the power supply voltage being used. 50Hz and 60Hz are common. (See "3.5 Replacing Fuses" for how to open the fuse holder lid.)

Warning **ELECTRICAL SHOCK**

There is a possibility of electric shock. Before replacing the fuse, turn OFF the power and remove the power cord.

Note Use a 4A fuse for 100 - 120V setting, and a 2A fuse for 220 - 240V power voltage setting.

(3) Insert the **enclosed power cable** into the power connector on the left side of the unit.

(4) Insert the power cable into the outlet.

(5) Turn ON the unit power switch.

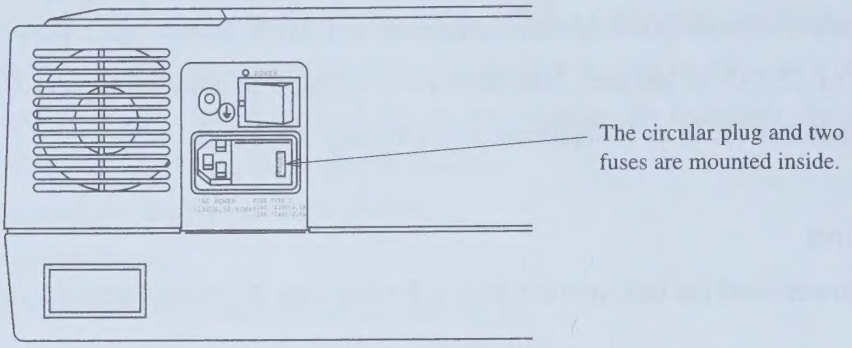

Fig. 1.3.1 Voltage Selector

1.4 Turning ON the Power and Initialization

When the power is turned ON, the spectrophotometer performs various checks and initial settings in the order shown in Fig. 1.4.1. The time required for this initialization is around four minutes when checking of all the items has finished normally.

Each item is initialized in order, and when initialization of the corresponding item properly completes, the star mark next to it is highlighted. However, if any kind of abnormality is detected, initialization of that item is interrupted without highlighting the star mark. For the details to be checked for each item and points to be checked at the occurrence of errors, see Chapter 3, 3.2 "Initialization and Error Display".

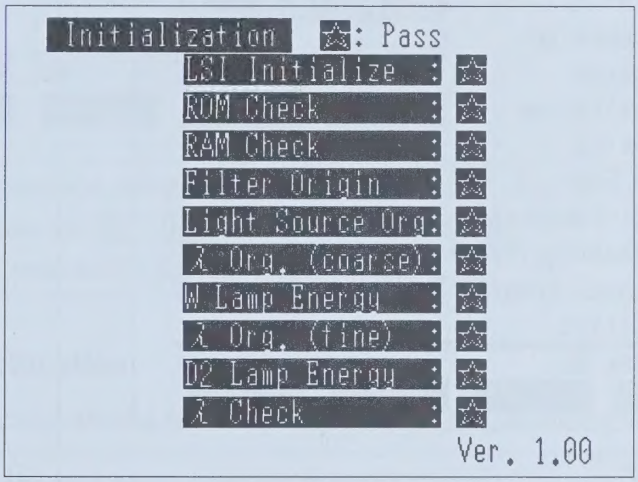

Fig. 1.4.1 Initial Setting Menu

When the shipper unit is used, if the beam does not enter the detector correctly passing through the center of the cell due to inappropriate attachment of the flow cell, or even with a properly set flow cell, if the beam is refracted due to the sample remaining in the cell in half way, an error such as energy shortage of the lamp may occur, resulting in interruption of initialization.

In such a case, it is necessary to fill the flow cell with distilled water and turn ON the power again. The initial setting menu right after power ON is displayed, and it is possible to suck distilled water into the flow cell by pressing the sipper unit lever before LSI initialization is complete.

Also, if the flow cell inside is dry, the inside wall of the flow cell is likely be adhered with dirt, and as the result, bubbles are likely to generate. Clean the flow cell after measurement, and turn OFF the power of spectropnotometer with the flow cell filled with distilled water. In this way, problems will not occur at the time of initial setting.

1.5 Installation Function Check

Once installation is complete, check the function of the following items. In the event that a functions(s) does not fulfill the specification listed below due to a shock during shipment, immediately notify the nearest service representative.

1.5.1 Baseline Flatness Procedure

Table 1.5.1 Procedure (Baseline Flatness)

Step	Operation, Monitor Display	Key Operation
1	Turn ON power (Let sit for 30 minutes after automatic initialization)	
2	Mode 550.0nm 0.000A 1.Photometric 2.Spectrum 3.Quantitation 4.Kinetics 5.Time Scan 6.Multi-Component 7.Photometric(Multi λ) 8.Optional Program Pack 9.Utilities Input item No. Params IC Card Mainte. PC Ctrl	
3	Select "2. Spectrum"	[2]
4	Set the measurement mode to "Abs" (Absorbance mode).	Enter [1] until "ABS" Is displayed.
5	Set scan range to 1100~190nm	[2][1][1][0][0] (ENTER) [1][9][0] (ENTER)
6	Set photometric range to –0.01~0.01Abs.	[3][-][0][.][0][1] [E][0][.][0][1] (ENTER)
7	Set scan speed to "Slow"	[4][4] (ENTER)
8	Spectrum 1100.0nm 0.001A 1.Meas. mode : ABS 2.Scanning range: 1100 nm ~ 190 nm 3.Rec. range : -0.01A ~ 0.01A 4.Scan speed : Slow 5.No. of scans : 1 6.Display mode : Sequential Input item No. (START:Measure) BaseCorr CallCurv SmplCntl SavParam	

continued.

Step	Operation, Monitor Display	Key Operation
9	Perform baseline correction.	(F1)
10	Start measurement.	(START/STOP)
11	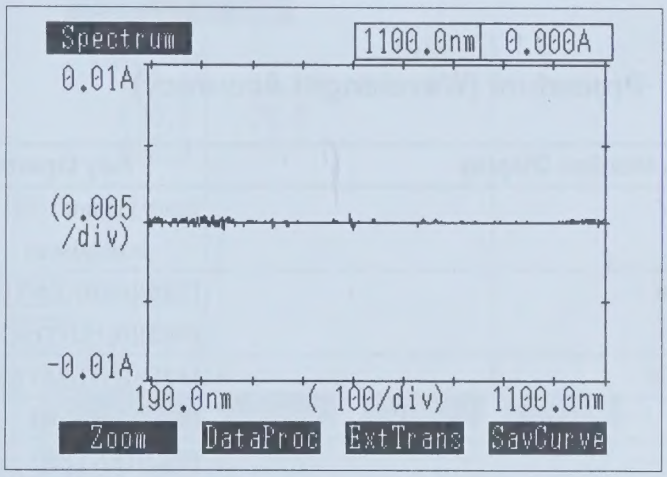	
12	When baseline measurement restarts, press the (START/STOP) key again. When you press the (RETURN) key, the process will return to Step 8. At this point, press the (MODE) key to return to Step 2.	

Normal Specification

Baseline flatness should be within ±0.001Abs, not including shock noise.

1.5.2 Wavelength Accuracy Measurement Procedure

Start from Step 4 of the "Baseline Flatness" procedure.

Table 1.5.2 Procedure (Wavelength Accuracy)

Step	Operation, Monitor Display	Key Operation
1	Set the measurement mode to "E".	Enter [1] until "E" is displayed
2	Set the scan range to 660~650nm.	[2][6][6][0] (ENTER) [6][5][0] (ENTER)
3	Set the recording range to 0~100E	[3][0](ENTER)[1][0][0](ENTER)
4	Set scan speed to "Mid".	[4][3] (ENTER)
5	Set the gain to 2.	[7][2] (ENTER)
6	Set the light source selection to the D2 lamp.	[8][2] (ENTER)
7	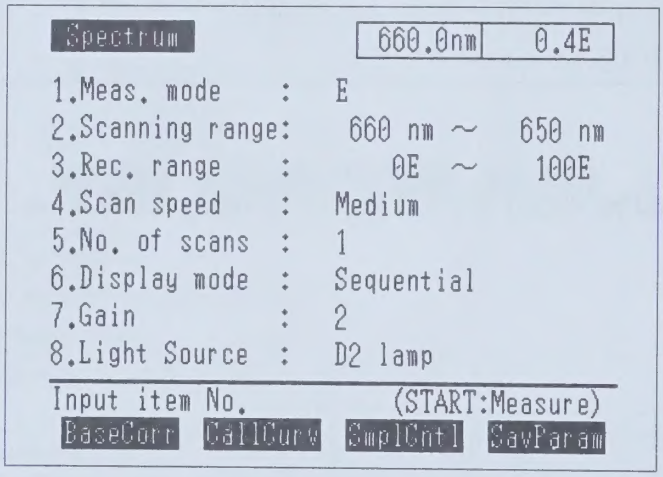	
8	Start measurement.	(START/STOP)
9	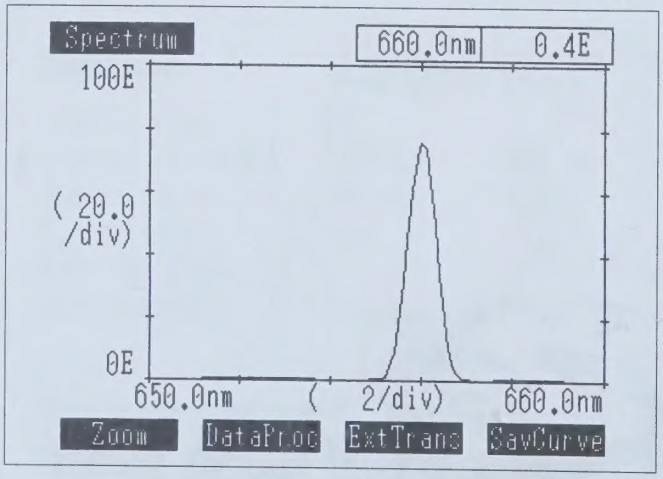	

continued.

Step	Operation, Monitor Display	Key Operation
10	Perform peak detection.	(F2)
11	Peak detection Abscis. E Abscis. E 658.1 0.9 656.0 76.0 652.0 0.7 Graph PrintOut Valley	
12	Find the difference between the wavelength of the peak found and 656.1nm.	
13	Return to the Parameter Setting screen.	(RETURN),(RETURN),(RETURN)
14	Set the scan range to 490~480nm.	[2][4][9][0] (ENTER) [4][8] [0] (ENTER)
15	Set the recording range to 0~30E	[3][0] (ENTER) [2][0] (ENTER)
16	Spectrum 490.0nm 2.1E 1.Meas. mode : E 2.Scanning range: 490 nm ~ 480 nm 3.Rec. range : 0E ~ 20E 4.Scan speed : Medium 5.No. of scans : 1 6.Display mode : Sequential 7.Gain : 2 8.Light Source : D2 lamp Input item No. (START:Measure) BaseCorr CallCurv SmplCntl SavParam	
17	Start measurement.	(START/STOP)

continued.

Step	Operation, Monitor Display	Key Operation
18	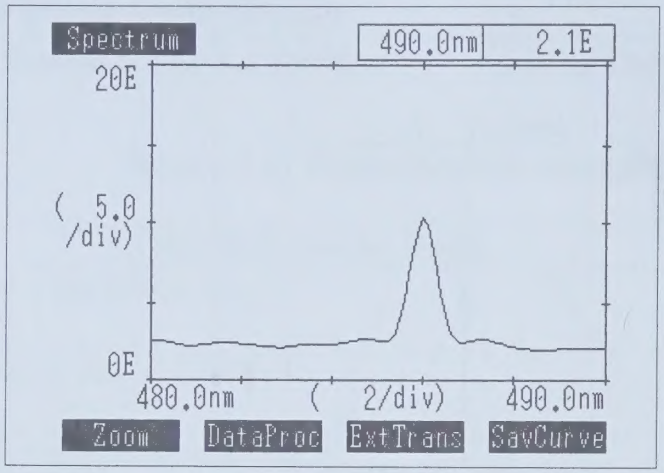	
19	Perform peak detection.	(F2)
20	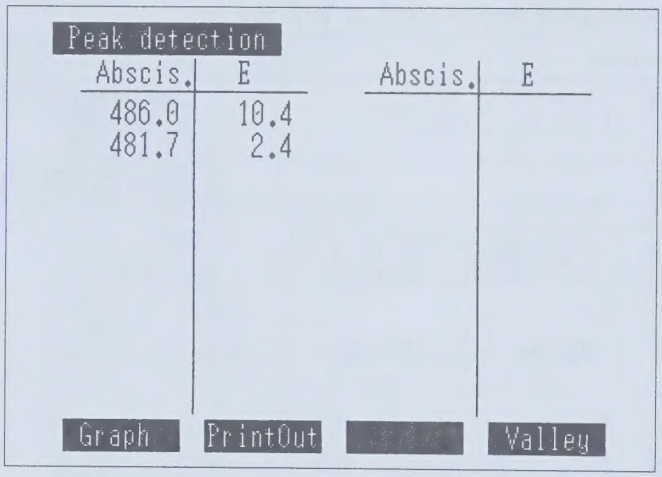	
21	Find the difference between the wavelength of the peak found and 486.0nm.	

Normal Specification

Within ±0.3nm

1.6 Electro Magnetic Compatibility

Note Descriptions of this section are only applied to the model for EU (European union) market : 206-55401-34

This instrument complies with European standard EN61326-1 which is amended at 1998.

Emission : Industrial location

Immunity : Industrial location

1) Electro Magnetic Emission

This instrument can use in industrial environments.

The test specifications are stated below.

1. Radiated Emission (EN61326-1 : 1997 + A.1998 Class B)
2. Conducted Emission (EN61326-1 : 1997 + A.. 1: 1998 Class B)

Note When a electro magnetic distrurbance occur to those instrument being used close to this product, Take appropriate distance between instruments to eliminate the disturbance.

2) Immunity to Electro Magnetic Interference

This instrument can use in industrial environments.

The test specifications are stated below.

1. Radiated Susceptibility (EN61000-4-3: 1996)

   Field strength : 10V/m, Frequency range 80-1000MHz, Modulation : 1kHz AM80%.

Note In this condition, the datum of this instrument may be noisy at some frequencies, but the instrument recovered automatically when the electromagnetic radiation has stopped.

2. Power Magnetic Fields (EN61000-4-8:1993)

   Magnetic field strength: 30A/m
3. Electrostatic Discharge (EN61000-4-2:1995)

   Charge Voltage : 4kV (Contact), 8kV (Air Discharge)
4. Fast Transients on AC Power Lines (EN61000-4-4:1995)

   Test Voltage : 2kV
5. Surge Immunity of AC Power Lines (EN61000-4-5:1995)

   Test Voltage : 1kV line to line, 2kV line to earth

6. Conducted Radio Frequency Immunity of AC Power Lines (EN61000-4-6:1996)
   Applied Voltage : 3V, Frequency Range 150k-80MHz, Modulation : 1kHz, AM80%
7. Immunity Against Voltage Dips and Interruptions on AC Power Lines (EN61000-4-11)

Note

Compliance to the standard does not ensure that the instrument can work with any level of Electro Magnetic interference stronger than the level tested.

Interference greater than the value specified in the condition above may cause malfunction of the instrument.

To avoid electro magnetic disturbance, following notices are recommended to be followed.

1) Before touching the instrument, discharge the electro statics charged in operator's body to ground by touching metallic structure connected to ground.
2) Do not install this instrument in such environment where strong electro magnetic fields are generated near by.

Chapter 2 Construction

CONTENTS

2.1 Exterior View 2-2
2.1.1 Front and Top Views 2-2
2.1.2 Left Side ViDes 2-3
2.1.3 Right Side View 2-4
2.2 Sample Compartment 2-6
2.3 Keyboard 2-7
2.4 Light Source Compartment 2-9

2.1 Exterior View

2.1.1 Front and Top Views

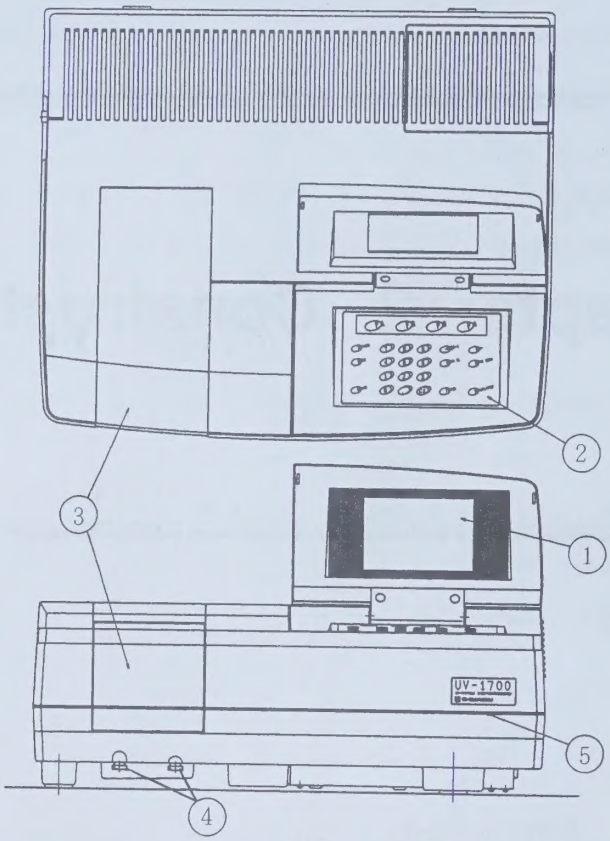

Fig. 2.1.1 Front and top views of UV-1700

① LCD Unit

This displays the operation menus and measurement results, etc. This is a 320×240 dot resolution, backlit LCD unit. You may adjust the angle and intensity for optimum visibility.

② Keyboard

This is the input component for giving operation commands and numeric values to the instrument. See "2.3 Keyboard" for detailed instructions.

③ Sample Compartment

This is the component in which the sample being measured is set. See "2.2 Sample Compartment" for details.

④ Sample Compartment Set Screws.

These are screws for fastening the sample compartment unit.

⑤ LED

This lights when the power to the unit is ON.

2.1.2 Left Side ViDes

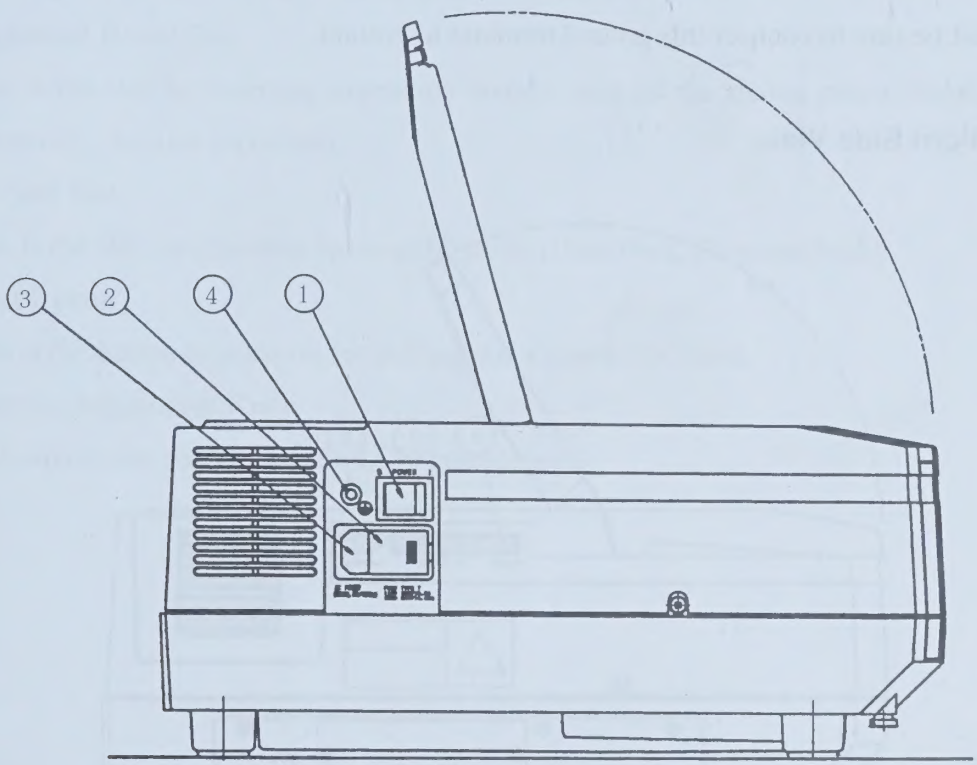

Fig. 2.1.2 Left side view of UV-1700

① Power Switch

This is the switch for turning the unit ON/OFF.

ON : when I is pushed in.

OFF : when ○ is pushed in.

② Voltage Selector/Fuse Holder

You can switch this between 4 levels (AC100, 120, 220, 240 or AC100, 120, 230, 240) according to the input power. Use two 4.0A fuse for the 100, 120V range, two 2.0A fuses for the 220, 230, 240V range.

Warning	**ELECTRICAL SHOCK**
	There is a possibility of electric shock. Before replacing the fuse, turn OFF the power and remove the power cord.

③ AC Power Connector

Connect the enclosed AC power cable to supply power from an AC electrical outlet.

④ Ground Terminal

This is the terminal for connecting to ground When using an ungrounded power supply, you must be sure to connect this ground terminal to ground.

2.1.3 Right Side View

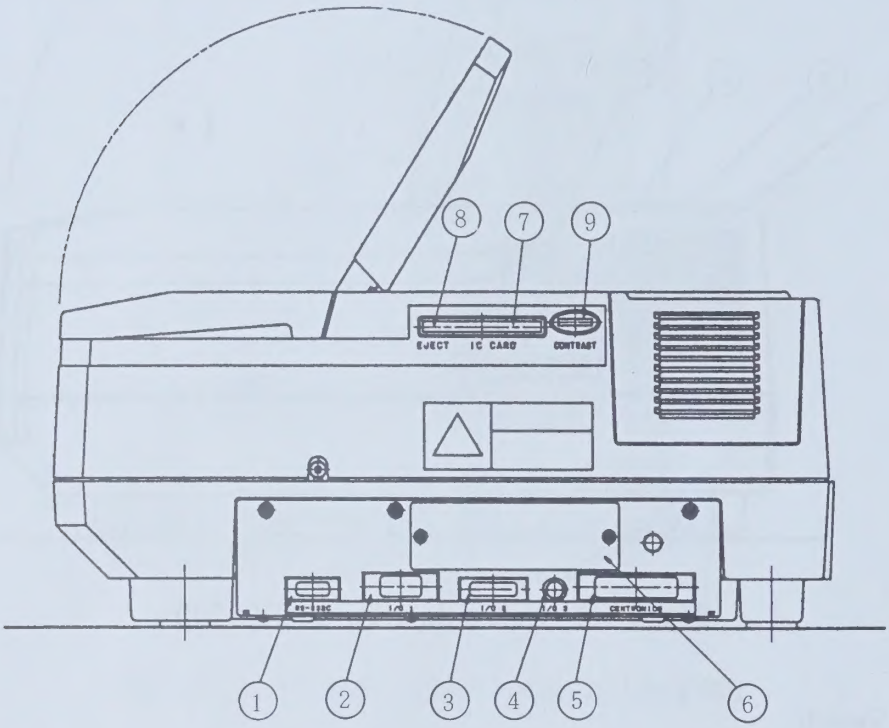

Fig. 2.1.3 Right side view of UV-1700

① RS-232C Connector

This is a standard RS-232C interface. This can be used to connect an optional printer or a computer equipped with a standard RS-232C interface.

② Attachment Connector (I/O 1)

This is the interface for connecting the optional "Auto Sample Changer (ASC-5)" or "Cell Positioner (CPS-240A)" accessory.

③ Attachment Connector (I/O 2)

This is the interface for connecting the optional "Sipper 160" or "Syringe Sipper" accessory.

④ Attachment Connector (I/O 3)

This is the output interface through which temperature settings are transmitted from the UV-1700 to the temperature regulator when the optional "Thermoelectrically Temperature Controlled Sipper Unit (TSU-2200)" accessory is installed.

⑤ Printer Connector (Centronix)

This is the interface for connecting an optional printer

⑥ Expansion Board Slot

This is the slot for inserting expansion boards, such as the analog output interface board, etc. Normally, the slot is covered.

⑦ IC Card Slot

This is the slot for inserting optional IC cards (Data Pack, Program Pack).

⑧ Eject Button

This is the button to press on for pulling out a inserted IC card.

⑨ Contrast Adjustment Knob

This adjusts the contrast on the LCD unit screen.

2. 2 Sample Compartment

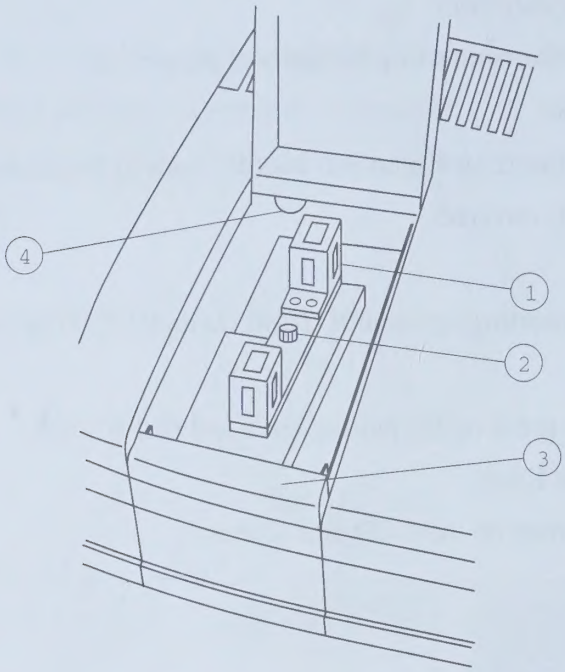

Fig.2.2.1 Sample compartment

① Cell Holder

The cell holder for the rectangular 10mm light path cells has one sample cell holder and one reference cell holder.

② Cell Holder Set Screws

The cell holder can be easily removed by loosening the cell holder set screws.

③ Cover, Sample Compartment

When using a flow cell, etc., holes are needed to pass tubing, etc. through. Therefore, this "Cover, Sample Compartment" can be removed and exchanged with different types of front panels.

(Please refer to Chapter 5. "5.5 Removing &Securing "Cover, Sample Compartment")

④ Multi-cell Holder Drive Connector

This is the connector for driving the optional "Multi-cell Holder" accessory.

2.3 Keyboard

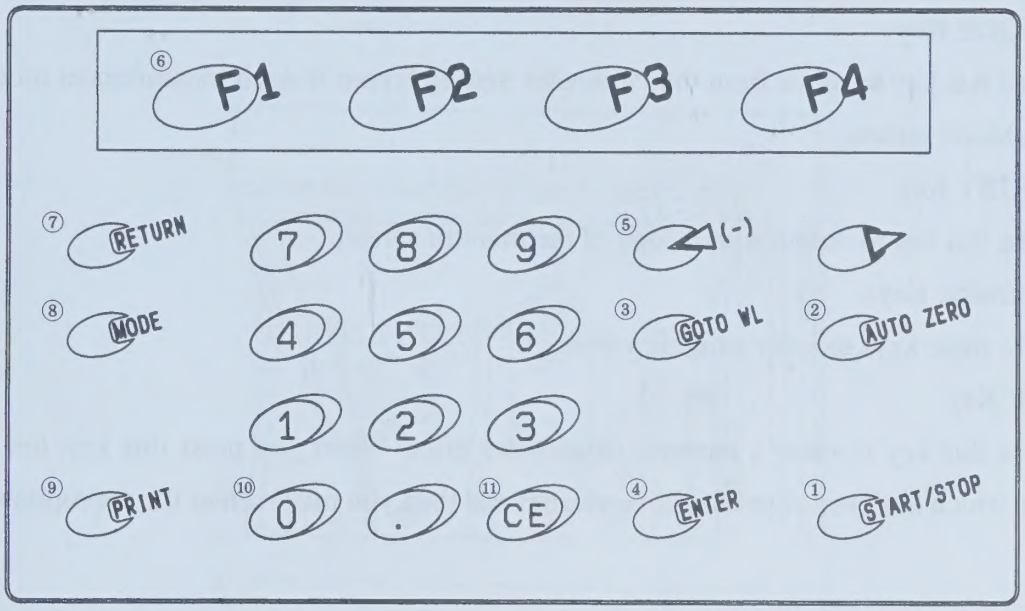

Fig. 2.3.1 Keyboard

① START/STOP Key

This is the key for starting and stopping measurement once parameter setting has been completed.

② AUTO ZERO Key

When you press this key, the current wavelength will automatically be set to 0Abs (100%T). Make sure that prior to sample measurement a blank cuvette is placed in both sample and reference sides.

③ GOTO WL Key

This is the key that is used to change the current wavelength.

④ ENTER Key

When you enter a value, press this key after the value to set the entering value.

⑤ Cursor Keys (◁(-), ▷)

Use these keys to move the cursor in the LCD screen left or right. The left cursor key can also be used to enter a negative (–) value when entering numeric values.

⑥ Function Keys (F1 through F4)

These are the keys corresponding to the functions that are displayed at the bottom of the LCD unit screen.

⑦ RETURN Key

Use this key to return to the one preceding screen from the current screen.

⑧ MODE Key

Use this key to move from the Parameter Setting screen in each measurement mode to the main Mode screen.

⑨ PRINT Key

Use this key to output a hard copy of the monitor screen.

⑩ Numeric Keys

Use these keys to enter numeric values.

⑪ CE Key

Use this key to clear a numeric value entry error. When you press this key, the numeric value which has been entered will be cleared and then you may reenter the appropriate value.

2.4 Light Source Compartment

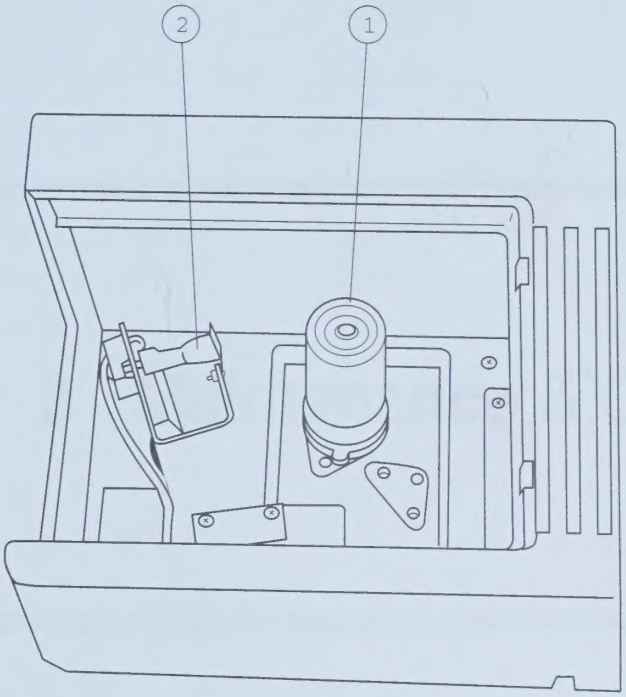

Fig 2.4.1 Light Source compartment

Warning	**HOT SURFACE** The light source and light source compartment both get very hot. To change a light source, turn off the power and then change the light source only after checking to see than it had cooled sufficiently.

① Deuterium Lamp (D2 Lamp)

This is the ultraviolet range (190nm to light source switch wavelength*) light source.

② Tungsten Halogen Lamp (WI Lamp)

This is the visible & near infrared range (light source switch wavelength* to 1100nm) light source.

* Light source switch wavelength

The light source switch can be set anywhere in the range from 295nm to 364nm in 0.1nm increments. For details, refer to the "Operating Guide", Chapter 12, "12.2 Explanation for Setting Instrument Parameters", <4. Light Source Switching Wavelength>.

Chapter 3 Maintenance & Checking

CONTENTS

3.1 Daily Maintenance & Periodic Maintenance 3-2
3.2 Initialization & Error Display 3-3
3.3 Troubleshooting 3-5
3.4 Replacing Light Source 3-8
3.4.1 Light Source Specifications 3-8
3.4.2 Light Source Replacement Procedure 3-9
3.5 Replacing Fuse 3-13
3.6 Cleaning the Unit 3-15
3.7 Precaution During Transportation of the Unit 3-16
3.8 List of Consumable Part, Spare Parts 3-17

(1) Cleaning Sample Compartment (Daily)

When handling large numbers of liquid samples, check the floor of the sample compartment for spilled solution samples. Wipe up spilled samples immediately according to Section 3.6 "Cleaning the Unit" in this chapter.

Note	Please be aware that if spilled samples are left, they may evaporate and the vaporized gas will fill in the sample compartment, corroding the interior and causing inaccurate measurement results.

(2) Checking the operation time of the lamp

This instrument is equipped with function to store and indicate the accumulated lighting time of the lamp. Because the lighting time is saved in the memory whose contents are retained by backup battery, its record is retained even if the power is turned OFF. However, it is reset when the backup batter is replaced or if any electrical trouble occurs. Accordingly, it is recommended to record the lighting time on your inspection record, if you wish to use the indicated lamp lighting time as a standard for lamp replacement.

(3) Checking Baseline Flatness (Monthly)

Inspect the flatness of the baseline according to the procedure in Chapter 1, 1.5.1 "Baseline Flatness" or the validation function equipped with this instrument. For how to use the instrument validation function, see Chapter 13, 13.2 "Instrument Validation Function" of Instruction Manual (Operation). If there is an abnormality in the baseline correct the instrument baseline according to Section 3.3, (5) " 'Instrument Baseline Correction' Procedure" in this chapter.

(4) Checking Wavelength Accuracy (Monthly)

Inspect the wavelength accuracy according to the procedure in Chapter 1, 1.5.2 "Wavelength Accuracy" or the validation function equipped with this instrument. For how to use the instrument validation function, see Chapter 13, 13.2 "Instrument Validation function" of Instruction Manual (Operation).

When any abnormality is found with the wavelength accuracy (when the peak wavelength of the measurement spectrum shifts ± 0.3 nm or more from the D2 emission line.), contact you service representative.

3. 2 Initialization & Error Display

When the power is turned ON, the spectrophotometer performs various checks and initial settings in the order shown in Fig. 3.2.1. The time required for this initialization is around four minutes when checking of all the items has finished normally.

Each item is initialized in order, and when initialization of the corresponding item properly complete, the star mark next to it is highlighted. However, if any kind of abnormality is detected, initialization of that item is interrupted without highlighting the star mark.

If an error message is displayed, inspect the instrument according to the check point items in Table 3.2.1. If the problem is still unclear, contact your Service Representative and describe the displayed error message.

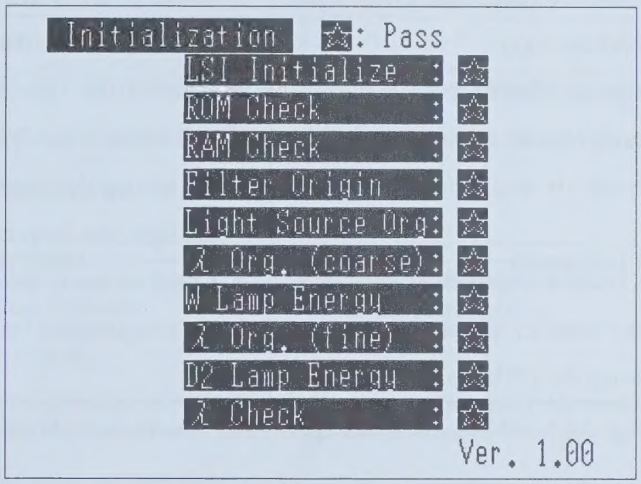

Fig. 3.2.1 Initialization screen

Table 3.2.1 Initialization and Errors

	Display	Description	Remedial Action
1	LSI Initialize	Initialize each I/O	Try turning the power OFF and then ON again. If the same error occurs again, contact your Service Representative.
2	ROM Check	Check program ROM	
3	RAM Check	Check memory elements (RAM)	Try turning the power OFF and then ON again. If the same error occurs again, contact your Service Representative as it is possible that the backup battery is dead.*2
4	Filter Origin	Detect reference position of filter	Try turning the power OFF and then ON again. If the same error occurs again, contact your Service Representative.

continued.

continued.

	Display	Description	Remedial Action
5	Light Source Org.	Detect reference position of motor that drives light source switching mirror	Same as above
6	λ Org.(coarse)	Detects mechanical wavelength origin position	Same as above
7	W Lamp Energy	Checks whether or not the WI lamp (tungsten iodine lamp) light energy is at full level	• Remove the light source compartment cover and check if the WI lamp is lit. If it is not lit, try turning the power ON again. If it still does not light, the lamp must be replaced.*1
8	λ Org.(fine)	Checks 0-order light which is the optical origin	• Check to see if there is something in the sample compartment that is obscuring the light.
9	D2 Lamp Energy	Checks whether or not the D2 lamp (deuterium lamp) light energy is at sufficient level	• Remove the light source compartment cover and check if the D2 lamp is lit. If it is not lit, try turning the power ON again. If it still does not light, the lamp must be replaced.*1
10	λ Check	Checks wavelength by detecting the intensity line at 656.1 nm using the D2 lamp	• Check to see if there is something in the sample compartment that is obscuring the light.

*1 Refer to Fig. 3.4.3 and Fig. 3.4.4 on Page 3-10 to remove the light source compartment cover.

Note *2 If you keep photometer in a state of power off for two years, battery charge is gone. Life span of battery is differ with state of using, but in case that "RAM ERROR" occurs frequently, please change battery.

3. 3 Troubleshooting

There are many instances in which the instrument will not operate properly as the result of consumable part deterioration, an operational error or neglect of maintenance and inspection. Please check the following items. If the cause of operation failure is still unknown after this inspection, contact your Service Representative.

(1) Does not operate at all. Nothing appears on the LCD unit screen.

Checking Point	Remedial Action
1. Is the power cord securely connected?	Securely connect the cord.
2. Is the fuse blown?	Replace the fuse.
3. Is the LCD contrast adjustment knob in the correct position?	Adjust the contrast.

(2) After power is ON, error message is displayed during initialization.
Inspect the check points listed in "Table 3.2.1 Initialization and Errors".

(3) Numbers cannot be entered from the keyboard.

Checking Point	Remedial Action
1. Is an incorrect value being entered? Example GOTO WL=1150nm	Enter the correct value.
2. Is the computer IC or the keyboard defective?	Contact our Service Representative.

(4) Photometry values are odd.

Checking Point	Remedial Action
1. Did you press mistakenly the [AUTO ZERO] key during measurement?	Return to the blank condition (reference condition) and press the [AUTO ZERO] key again. Perform proper processing.
2. Sample processing error	
3. Is the cell being used appropriate?	Do not use a glass cell in the ultraviolet range.
4. Is a cell phone being used near the instrument?	The measured value may be influenced depending on the types of cell phones and the radio wave conditions. Avoid using a cell phone near the instrument during measurement.

(5) Baseline curve does not meet normal specifications.

Checking Point	Remedial Action
1. When correcting the baseline, did you put a solvent with high absorbance in the cell holder on only one side?	Place cells with the same solvent in both the sample side and the reference side and perform baseline correction again.
2. Is the beam on only one side restricted?	Set the beam conditions so that they are identical on both the sample side and the reference side.
3. Are you using a optional accessory?	Some of the unit specifications may not be met when certain of optional accessories are installed.
4. If none of the above three scenarios applies.	Correct the instrument baseline by the following procedure.

- **"Instrument Baseline Correction" Procedure**

  Approx. 15 min is required for instrument baseline correction.

Table 3.3.1 Instrument Baseline Correction Procedure

Step	Operation, Monitor Display	Key Operation
1	Return to the Top Menu.	Press the (RETURN) key until the screen changes. Then press the (MODE) key.
2	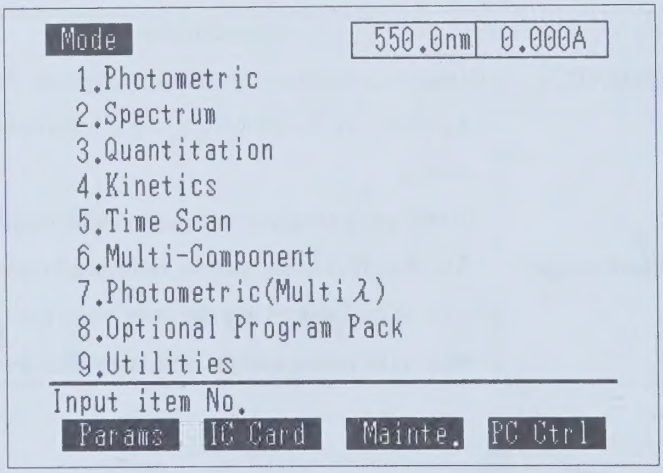	

continued.

Step	Operation, Monitor Display	Key Operation
3	Select "Maintenance"	(F3)
4	Maintenance 1.Validation 2.Instrument Baseline Correction Corrected date : 01/02/08 19:42:50 3.Lamp time used WI Lamp : 44hours D2 Lamp : 52hours Input item No.	
5	Select "2. Instrument baseline correction"	(2)

3.4.1 Light Source Specifications

Table 3.4.1 Light Source Specifications

	WI Lamp	D2 Lamp
Part No.	062-65005	062-65055-05
Type	NA55917	L-6380
Average life	2000 hours	500 hours
Characteristics	12V 20W	Discharge voltage: 75~95V Discharge current: 300mA Discharge start voltage: 230~350V
Shape	Fig. 3.4.1 (a)	Fig. 3.4.1 (b)

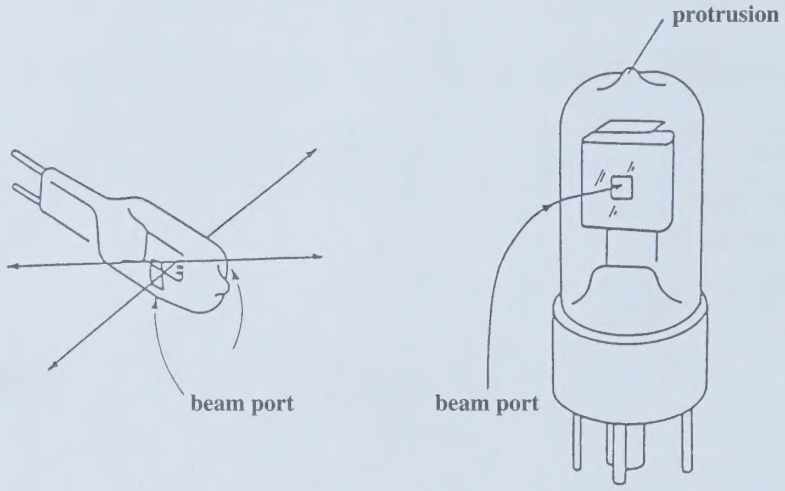

(a) WI Lamp (b) D2 Lamp

Fig. 3.4.1 Light source appearances

3.4.2 Light Source Replacement Procedure

Warning **HOT SURFACE**

The light source and light source compartment both get very hot. To change a light source, turn off the power and then change the light source only after checking to see that it has cooled sufficiently.

Caution

1. Please wear gloves when handling the light source so as not to leave fingerprints on the beam port of the new light source. A fingerprint will burn onto the bulb, and when the light source gets hot, light transmission will deteriorate.
2. Be especially careful when removing and mounting the light source compartment cover so that the back of the cover does not strike the protrusion on the top of the D2 lamp (deuterium lamp). Such a hit could cause a leak in the tube's vacuum.

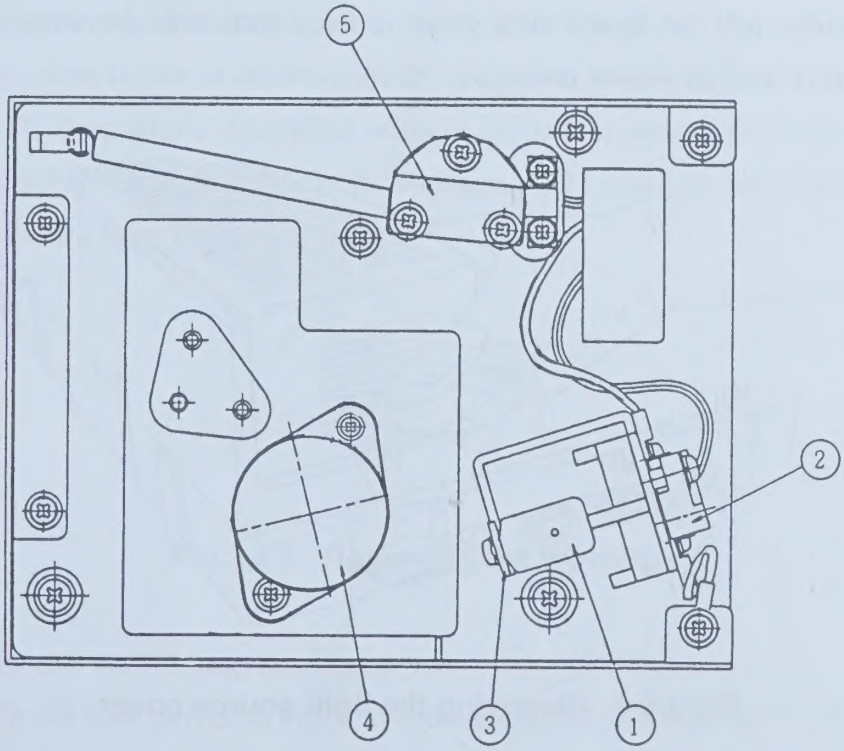

(1) WI lamp
(2) WI lamp socket
(3) WI lamp retainer spring
(4) D2 lamp
(5) Light source switching mechanism

Fig.3.4.2 Interior of light source compartment

- **Replacing the D2 lamp**

(1) Press on the parts indicated by the arrows in Fig.3.4.3 on the sides of the light source cover, lift the cover up and release, the "catch".

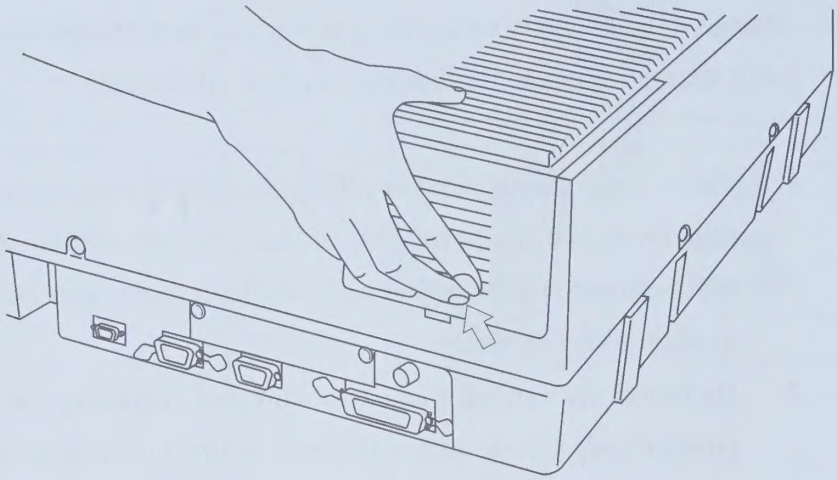

Fig. 3.4.3 Light source cover

(2) Next, pull the light source cover in the direction of the arrow in Fig.3.4.4 to remove the light source cover.

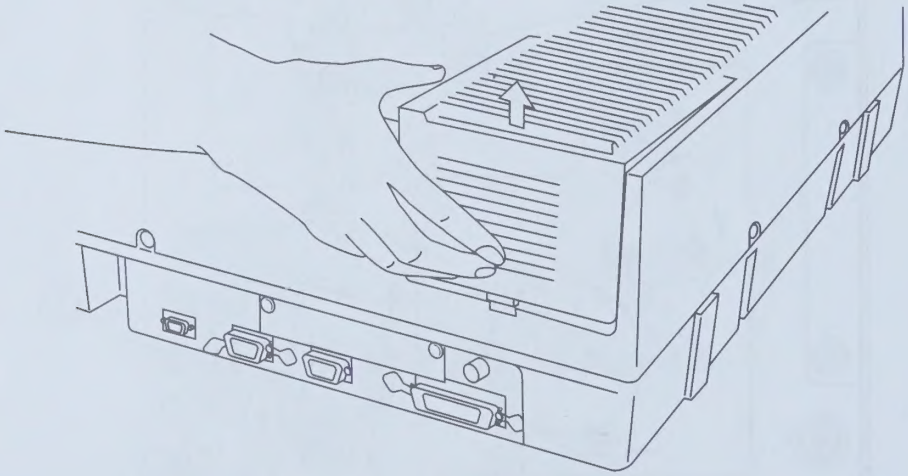

Fig 3.4.4 Removing the light source cover

(3) Slowly extract the D2 lamp upward and remove it from its socket.

(4) Insert the new D2 lamp in the socket. Check at that time to see that it is well seated.

(5) Turn ON the power.

(6) Press the [GOTO WL] key and set the wavelength to 250nm.

(7) Check to see that the beams is shining into the monochromator entrance slit properly. The spectrophotometer will automatically make horizontal adjustments (The center of the beam does not necessarily have to match the center of the slit.) If the lamp has not been replaced properly, the beam may not match with the entrance slit in the vertical direction.

(8) Close the light source compartment cover.

- **Replacing the WI lamp**

(1) Press on the parts indicated by the arrows in Fig.3.4.3 on the sides of the light source cover, lift the cover up and release the "catch".

(2) Next, Pull the light source cover in the direction of the arrow in Fig.3.4.4 to remove the light source cover.

(3) Remove the WI lamp retainer spring from the end of the top of the WI lamp. Since there is fear of touching the D2 lamp with your hand at this time, either cover the D2 lamp with a clean piece of paper or cloth or remove the D2 lamp before performing this operation, (Refer to "Replacing D2 Lamp" for the procedure of removing the D2 lamp.)

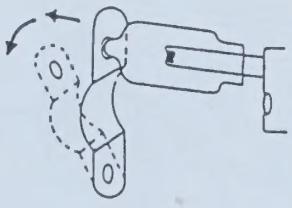

Fig.3.4.5 Removing the WI lamp

(4) Extract the WI lamp from its socket.

(5) Please wear gloves so as not to contaminate the beam port of the WI lamp. Then , holding the new WI lamp so as to grasp it from the top and bottom, insert it into its socket.

(6) Insert the protrusion at the top of the WI lamp into the hole in the retainer sprint so that the WI lamp does not fall out.

(7) Reset the previously removed D2 lamp. Refer to "Replacing D2 Lamp" for the method of resetting the D2 lamp.

(8) Turn ON the power.

(9) Check to see that the beam is shining into the monochromator entrance slit properly. The spectrophotometer will automatically make horizontal adjustments. (The center of the beam does not necessarily have to match the center of the slit.) If the lamp has not been replaced properly, the beam may not match with the entrance slit in the vertical direction.

(10) Close the light source compartment cover.

3. 5 Replacing Fuse

Warning **ELECTRICAL SHOCK**

There is a possibility of electric shock. Before replacing the fuse, turn OFF the power and remove the power cord.

When the fuse burns out, replace it by the following procedure. Use only the specified fuse.

(1) Turn OFF the power.

(2) Remove the power cord from the power connector.

(3) Use a standard screwdriver to open the cover on the fuse holder, as shown in Fig. 3.5.1.

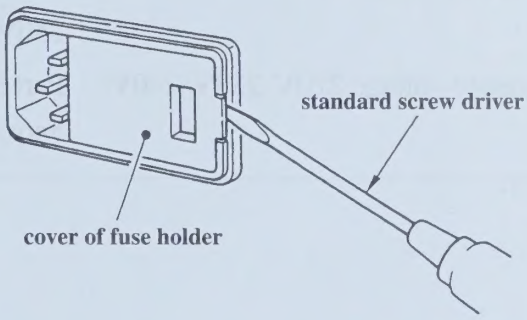

Fig. 3.5.1 Opening the fuse holder cover

(4) Pull out the fuse holder, as shown in Fig. 3.5.2

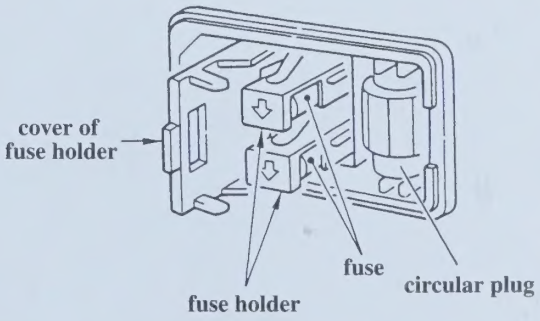

Fig. 3.5.2 Interior of fuse holder

(5) Remove the old fuse from the fuse holder and replace it with the new fuse. Of the two fuses, you need only replace the burned out fuse. (If both fuses are burned out, replace both fuses.)

(6) After replacing the fuse, push the fuse holder in so that the arrow on the fuse holder points down.

(7) Close the fuse holder cover until you hear its snap shut.

Note After replacing the fuse, turn ON the power switch and check to see that the unit initializes properly.

Caution Pay attention to the rating and type of the fuse.
Be sure to replace with the fuse of the specified rating and type.

Power supply voltage 100V, 120V:	Part No. 072-02004-22 250V 4A T (5×20)
Power supply voltage 220V, 230V, 240V:	Part No. 072-02004-19 250V 2A T (5×20)

3. 6 Cleaning the Unit

The spectrophotometer case and sample compartment should be kept clean. Cleaning should be done with a soft cloth slightly dampened with water or a solution of water and a mild detergent. Do not use an excessively damp cloth that liquid can drip into the spectrophotometer.

Caution	Be very careful not to spill water, organic solvent, etc. on the instrument. Spilling liquid on the instrument can cause electric shock, fire, damage or malfunction of the instrument.

3.7 Precaution During Transportation of the Unit

Caution This unit weighs about 18kg. When moving this unit, it must be lifted by two persons firmly holding at the positions shown in the diagram.

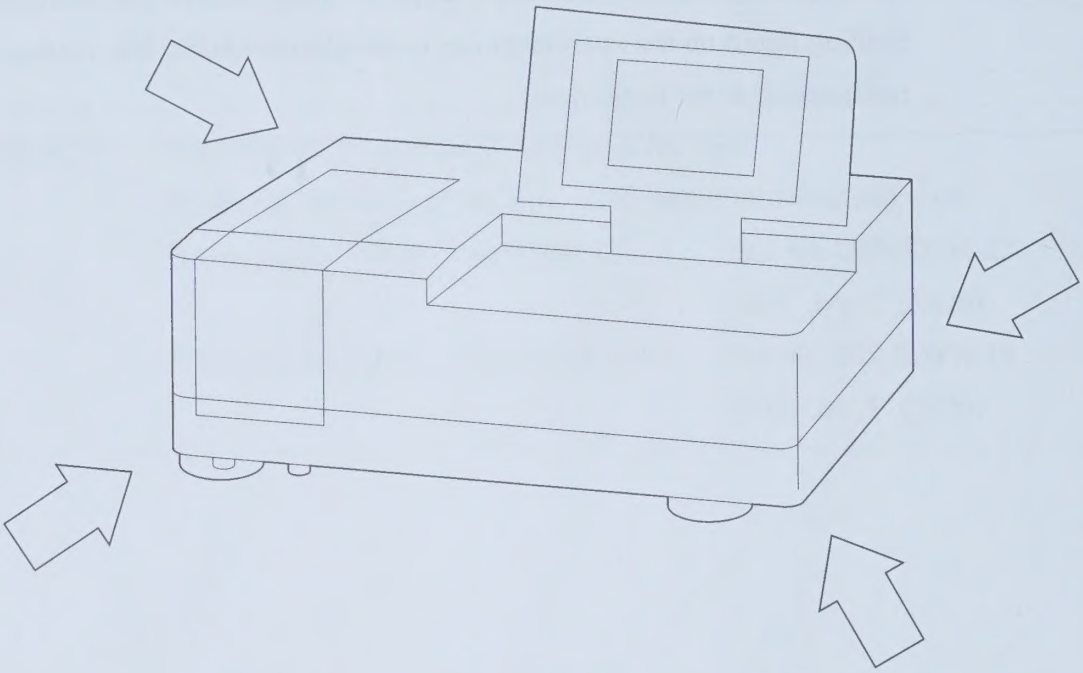

Fig. 3.7.1

3. 8 List of Consumable Part, Spare Parts

Part Name	Model	Part No.
Tungsten iodide lamp	NA55917	062-65005
Deuterium lamp	L-6380	062-65055-05
Cover, sample compartment		206-80401
Cell holder assembly		202-30215
Fuse 4.0A (for 100, 120V)		072-02004-22
Fuse 2.0A (for 220, 230, 240V)		072-02004-19
AC power cord (for 100, 120V)		071-60814-01
AC power cord (for 220, 230, 240V)		071-60814-05
Ground adapter (for 100, 120V)		071-60803-01
PCB assembly, CPU		206-55200-91
PCB assembly, preamplifier		206-55206-91
PCB assembly, console board		206-87615-92
PCB assembly, power		206-55203-91
Keyboard		206-69620
LCD		078-12114-11
Backup battery	CR2032	074-73307-01

Chapter 4 Spectrophotometer Basics

CONTENTS

4.1 What is Light? 4-2
4.2 Ultraviolet/Visible Spectrum 4-4
4.3 Bouguer-Beer's Law 4-5
4.4 Qualitative Analysis and Quantitative Analysis 4-6
4.4.1 Spectrum and chemical structure (Qualitative analysis) 4-6
4.4.2 Colorimetric analysis (Quantitative analysis) 4-6
4.5 Calibration Curve 4-7
4.6 Solvent Selection 4-8
4.7 Calibration Curve Curvature 4-9
4.8 Spectrophotometer Types 4-11
4.8.1 Single and double beam configurations 4-11
4.8.2 Single and double detector configuration 4-12
4.8.3 Single monochromator and double monochromator 4-13

4. 1 What is Light?

Light is a type of electromagnetic radiation with a speed of 3.0 x 10 8 m/sec in a vacuum. Electromagnetic radiation includes X-ray, ultraviolet rays, visible light, infrared ray, and radio waves.

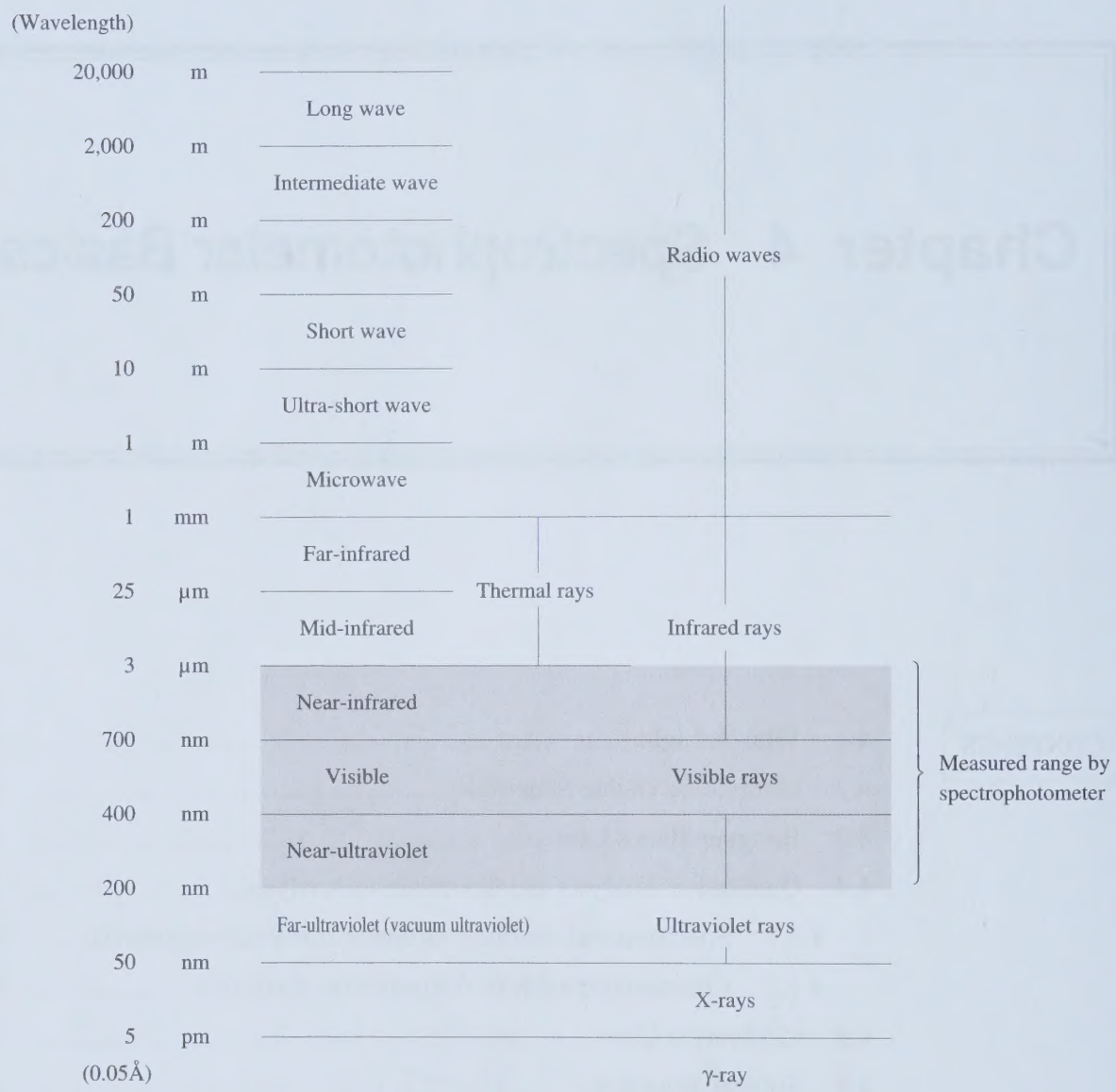

(Note) 1mm = 10^{-3}m, 1mm = 10^{-6}m, 1nm = 10^{-9}m, 1pm = 10^{-12}m

Fig. 4.1.1 Types of electromagnetic waves

Wavelength is defined as the length of a single cycle and is usually indicated by a sign called rambda, λ.

For the range of ultraviolet ray and visible lights, a unit called nm (nanometer) is used.

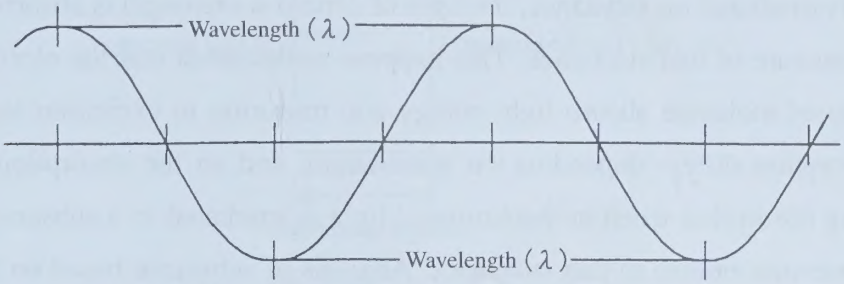

Fig. 4.1.2 Wavelength

Generally, rays of various wavelength are mixed in the light emitted from light source (although some emit rays of certain wavelength such as laser light source or others emit light of more than one certain wavelengths such as mercury lamp. The light of a certain wavelength extracted selectively by the use of a monochromator is called monochromatic light. On the other hand, light that includes all the rays in the wavelength range of visible rays is called white light. The relation between wavelength and color is as follows:

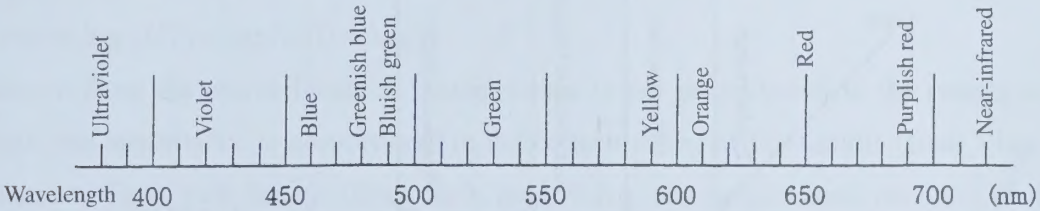

Fig. 4.1.3 Wavelength and color of light

When white light is irradiated on some substance and if the substance absorbs the blue light, it appears yellow, which is the (additive) complementary color of blue. If monochromatic light of blue color is irradiated on this substance, the light is absorbed and the substance appears black as the result that no color exists.

Table 4.1.1 Colors and complementary colors

Wavelength(nm)	Color	Complementary color
400 - 435	Violet	Yellow green
435 - 480	Blue	Yellow
480 - 490	Greenish blue	Orange
490 - 500	Bluish green	Red
500 - 560	Green	Purplish red

Wavelength(nm)	Color	Complementary color
560 - 580	Yellow green	Violet
580 - 595	Yellow	Blue
595 - 610	Orange	Greenish blue
610 - 680	Red	Bluish green
680 - 700	Purplish red	Green

The energy (E) of light can be expressed as follows.

$E = ch/\lambda$

c is the velocity of light, h is Planck's constant, and λ is wavelength.

When light is irradiated on substance, the light of certain wavelength is absorbed according to the molecule structure of that substance. This happens as the result that the electrons existing at the ground state of molecule absorb light energy and transition to excitation state occurs. The amount of absorption differs depending on wavelength, and so the absorption spectrum (the curve measuring absorption when monochromatic light is irradiated to a substance with varying wavelengths) becomes unique to that substance. Analysis of substance based on this principle is called absorptiometry and this method allows (1) Identification, (2) Quantitative analysis, (3) Analysis of electron state. Also, the excited molecule loses energy due to heat and collision with the other molecule and returns to its ground state. This process is called "radiationless transition". In addition to this, the molecule may go through the process to radiate the absorbed light energy as light when returning to the ground state. Fluorescent light and phosphorescence is included in this and the analysis utilizing this phenomena is called fluorometry.

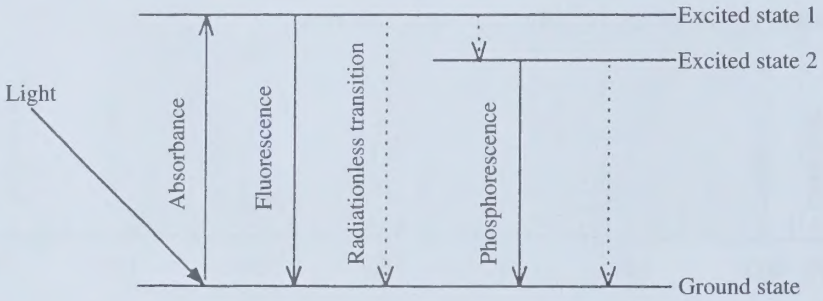

Fig. 4.2.1 Molecule energy

4. 3 Bouguer-Beer's law

This law, which is the basic principle of quantitative analysis, is also called Lambert-Beer's law.

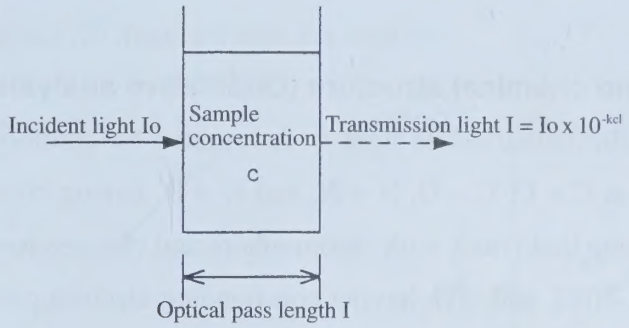

Fig. 4.3.1 Bouguer-Beer's law

When light with the intensity of Io is irradiated on a certain substance and the light with the intensity of I has transmitted, the following relational formula is established, where K stands for proportional constant.

At this time, I/Io is called transmittance (T), I/Io × 100 is percent transmittance (T%) and (1/T) = log (Io/I) is called absorbance (Abs).

$$T = I/Io = 10^{-k \cdot c \cdot l}$$

$$Abs = \log (1/T) = \log (Io/I) = k \cdot c \cdot l$$

As known from the above formula, transmittance is not proportional to the concentration of the sample, but absorbance is proportional to the concentration of the sample (Beer's law) and is proportional to light path length (Bouguer's law). Also, the proportional constant at the time when the light path length is 1 cm and the concentration of object component is 1 mol/l is called molar absorptivity and is represented by the sign of ε.

This molar absorptivity becomes a value unique to the substance under specific conditions.

For fulfillment of Bouguer-Beer's law, it is necessary to satisfy conditions such as being free from stray light, emission, scattering, and reflection.

4. 4 Qualitative Analysis and Quantitative Analysis

To analyze what this substance is and what substances are mixed are called qualitative analysis, while to analyze the amount of these substances is called quantitative analysis.

4.4.1 Spectrum and chemical structure (Qualitative analysis)

The absorbance of ultraviolet/visible light is determined by chromophore (functional group that absorbs light such as C = C, C = O, N = N, and N = O, having multiplet bonding) and auxochrome (functional group that bonds with chromophore and changes its absorbance position and intensity such as - OH, -NH2, and -SH, having non-bonding electron pair), and so is related with chemical structure. In this case, absorbance may change depending on introduction of substitution group and types of solvent. Movement of absorbance wavelength to longer wavelength side is called “bathochromic movement”, its movement to shorter wavelength side is called “hypsochromic movement”. Also, increase of absorbance is called “hyperchromic effect” and decrease is called "hypochromic effect".

4.4.2 Colorimetric analysis (Quantitative analysis)

Analysis method to perform quantitative analysis by comparing color darkness of substance is called colorimetric analysis. When the substance is transparent, if absorbance exists in the invisible ultraviolet/near infrared area, it is measured. The latter is included in colorimetric analysis in wide meaning.

4.5 Calibration Curve

The quantitative method to measure concentration of the sample with unknown concentration from the absorption of the sample with known concentration is provided in two methods: (1) Calibration curve method and (2) Standard additive method.

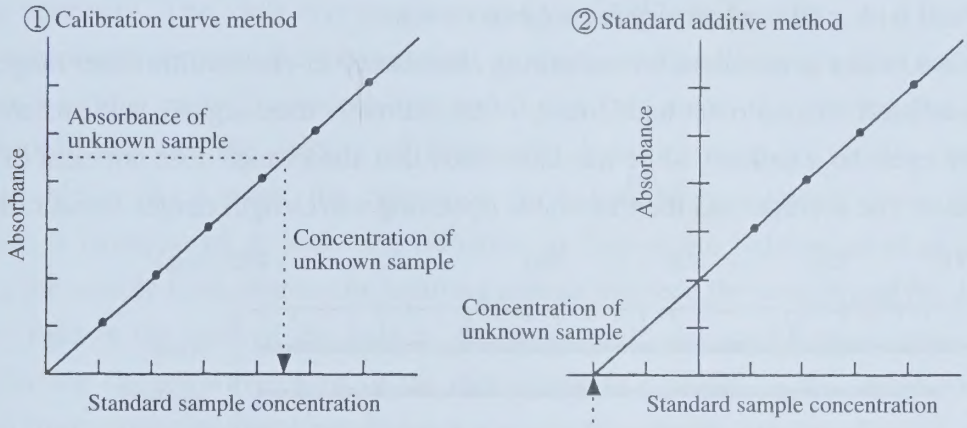

Fig. 4.5.1 Calibration curve

In the calibration curve method, standard samples are operated according to established method then measured for absorbance. A calibration curve is prepared by using the absorbance obtained here in the vertical axis and the standard sample in the horizontal axis. There are times when the calibration curve does not make a straight line such as when the solution to be measured is suspension. Although the calibration curve is sure to pass the origin when blank solution is used, if it is not used, the curve may not pass the origin. Next, the concentration of object component in the unknown sample is obtained using this calibration curve.

In the standard additive method, standard sample is added by stages to four or more pcs of measurement sample solution of the same concentration. Similarly to calibration curve method, relation curve between added value and absorbance is prepared. The concentration of the object component in the unknown sample is obtained form the point where the related curve crosses the vertical axis. This method is applied only when the related curve is straight as far as to the low concentration range.

Generally, extra-large absorbance wavelength is used as measurement wavelength for quantitative analysis.

4. 6 Solvent Selection

Generally when sample is analyzed, it is measured in the state of solution. Accordingly, the type and the concentration of solvent must be adequate. A solvent that solves sample well, is free from mutual action, has small absorbance in measurement wavelength range and has small volatility is desired. If it is not transparent when sample is dissolved, measurement error becomes large and a cell with a lid is necessary for volatile solvent.

As a solvent, water is excellent for measuring absorbance in visible/ultraviolet range, as it has no absorbance itself. On the other hand, many of the normally used organic solvents are transparent to human eyes, so it is likely to be misunderstood that absorbance does not exist in ultra-violet range either. The solvents and their available operating wavelength ranges are as follows:

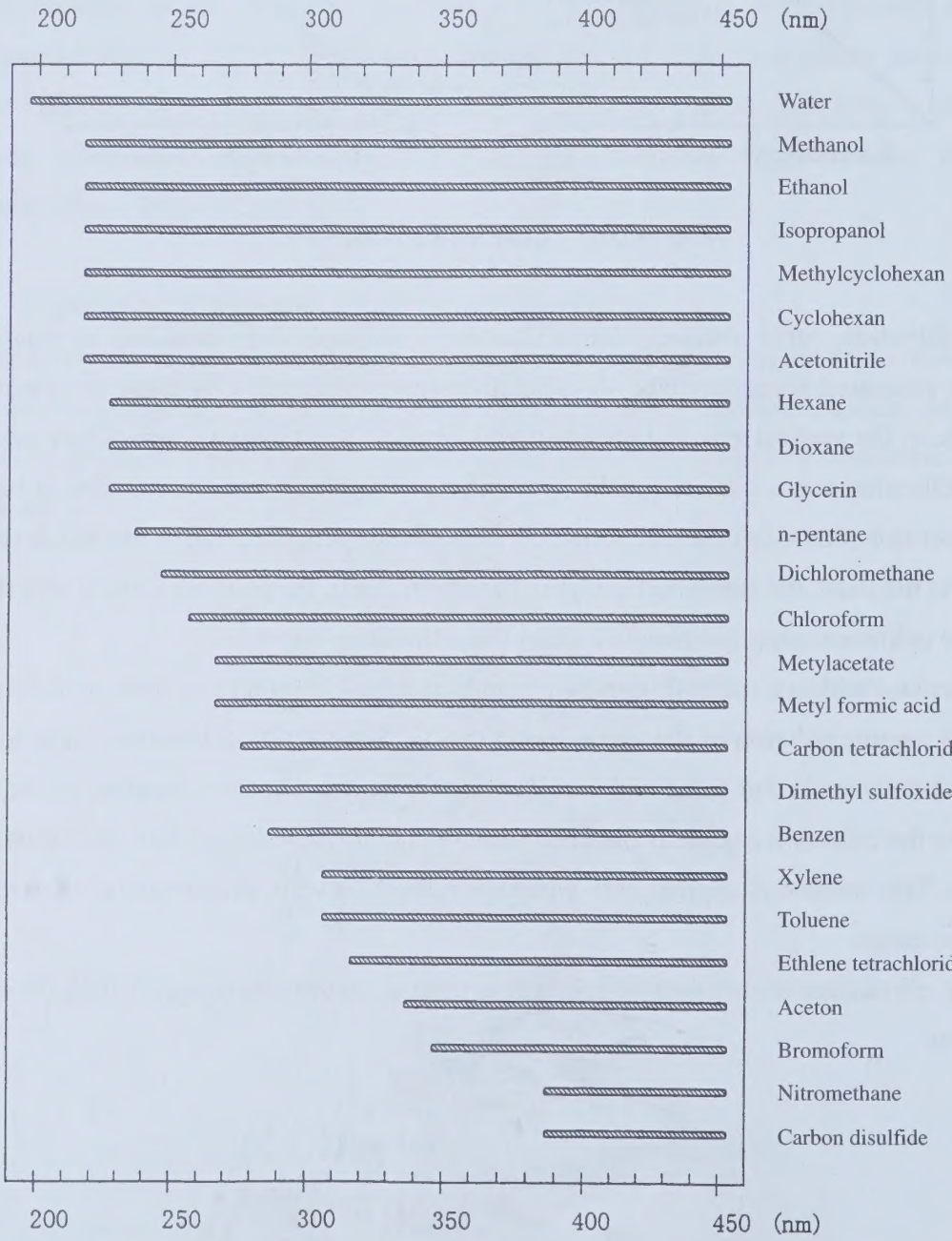

Fig. 4.6.1 Wavelength range for solvent to be used (using a 10 mm cell)

4.7 Calibration Curve Curvature

A calibration curve is generally straight. However, it may be bent in the beginning due to various reason. The probable causes are ① drift of measurement circuit, ② fluorescent sample, ③ stray light, ④ broad band width, and ⑤ measurement at the spectrum shoulder.

① As a spectrophotometer has drift right after power is supplied, warming up for 30 min. to one hour is necessary. Also, drift may be observed for a long period of time, so it is important to check wavelength accuracy and measurement accuracy periodically using a filter and the like.

② When a sample emits fluorescent light and if that light enters the detector, the absorbance may appear low and the amount of fluorescent light increases as sample concentration becomes higher. As a result, the calibration curve may be bent toward lower side. In this occasion, it is necessary to make the influence of fluorescent light as small as possible by leaving the sample from detector or inserting a mask between the sample and the detector.

③ Stray light is the total of the light of the wavelength deviated from a certain spectrum width having the set wavelength of the monochromator placed in the center and the light emitted from monochromator but does not transmit the sample and pass the side of the sample. For example, with 0.1% of stray light included in the monochromatic light, when sample with the wavelength of λ o and absorbance of 2 (transmittance 1%) is measured, because 0.1% stray light is added in addition to 1% of the light with the wavelength of λ o, the transmitted light will have 1.1% of transmittance (absorbance 1.959), causing 2% error. As known from this, the higher the sample absorbance is, the larger the error due to stray light becomes. To reduce stray light, it is generally effective to form double-monochromator by connecting two monochromators. Although it is expensive due to complex mechanism, the amount of stray light is reduced to one-fifties (1/50) to one-one thousandth (1/1000) of that of normal single monochromat or.

Table 4.7.1 Error of absorbance due to stray light

	Absorbance								
Stray light	0.8	1.0	1.2	1.5	1.8	2.0	2.5	3.0	4.0
1	0.0222	0.0370	0.0595	0.1150	0.2081	0.2967	0.6150	1.0370	2.0000
0.5	0.0133	0.0190	0.0309	0.0615	0.1169	0.1739	0.4096	0.7759	1.7059
0.2	0.0045	0.0077	0.0126	0.0257	0.0507	0.0783	0.2119	0.4762	1.3213
0.1	0.0022	0.0038	0.0063	0.0130	0.0261	0.0409	0.1188	0.3005	1.0409
0.05	0.0011	0.0019	0.0032	0.0065	0.0132	0.0209	0.0635	0.1758	0.7799
0.02	0.0004	0.0007	0.0012	0.0026	0.0053	0.0085	0.0365	0.0790	0.4770
0.01	0.0002	0.0003	0.0006	0.0013	0.0026	0.0042	0.0134	0.0413	0.3009
0.005	0.0001	0.0001	0.0003	0.0006	0.0013	0.0021	0.0067	0.0211	0.1791
0.002	0.0000	0.0000	0.0001	0.0003	0.0005	0.0008	0.0027	0.0085	0.0791
0.001	0.0000	0.0000	0.0000	0.0001	0.0002	0.0004	0.0013	0.0043	0.0413
0.0001	0.0000	0.0000	0.0000	0.0000	0.0000	0.0000	0.0001	0.0004	0.0043

(Test and Engineering Vol.9 No.9,702,1981)

④ As a light source of spectrophotometer, a halogen lamp and a deuterium lamp are used. Because these lamps emit continuous spectrum, taking out 500 nm monochromatic light from the monochromator does not mean that only the light of 500 nm is taken out, but the light in a wavelength range having a certain width is taken out.

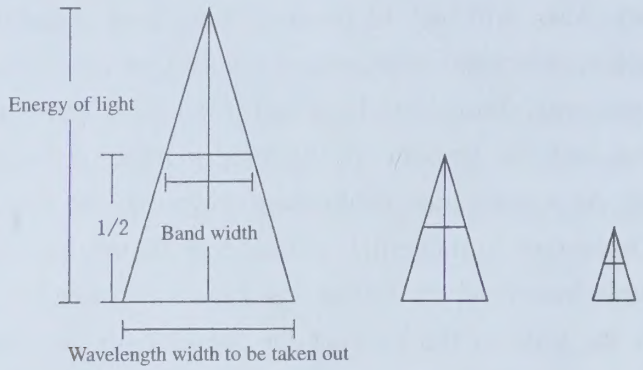

Band width	1	1/2	1/4
Area	1	1/4	1/16
Total amount of energy of light	1	1/4	1/16

Fig. 4.7.1 Band width and energy of light

Because the absorption coefficient of substance differs depending on wavelength, even if the central wavelength is the same, with different bandwidth, the wavelength width of the light to be taken out varies. This causes absorption coefficient to be changed in appearance and this results in absorbance change. It is sufficient to set the bandwidth of spectrophotometer to one-eighth (1/8) to one-tenth (1/10) of half width of sample's absorbance spectrum. The half-width of the absorbance spectrum means the width at the half of the peak of absorbance spectrum. Because absorbance spectrum often has broad half-width in colorimetric analysis, bandwidth of 10 nm is sufficient. Making the bandwidth extremely narrow generates large noise due to energy shortage and may result in poor measurement accuracy. If the bandwidth is made large, the peak height becomes low in appearance and this may cause the calibration curve to be bent.

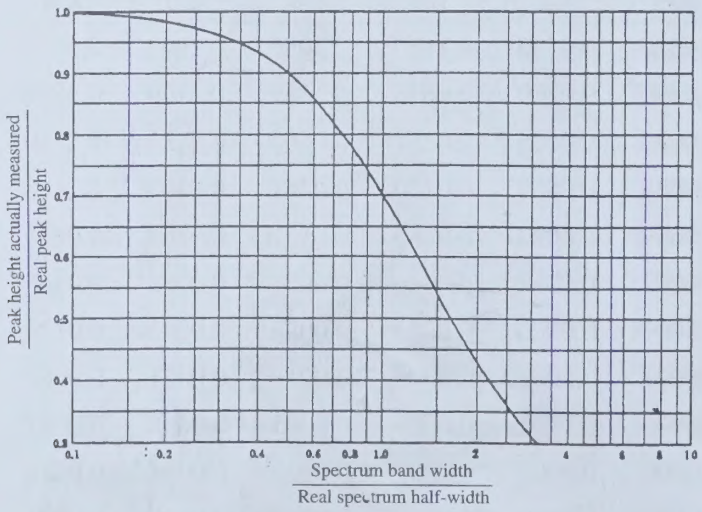

Fig. 4.7.2 Band width and peak height

4. 8 Spectrophotometer Types

Spectrophotometers can be categorized broadly by optical systems as follows:

- Measurement optical system
  - Single beam configuration
  - Double beam configuration
    - Single detector configuration
    - Double detector configuration

4.8.1 Single and double beam configurations

- Single beam configuration

  This configuration allows only one beam to pass through the sample compartment. First, set the transmittance to 100% or the absorbance to 0 using the cell filled with solvent, and then measure the cell with sample in it.

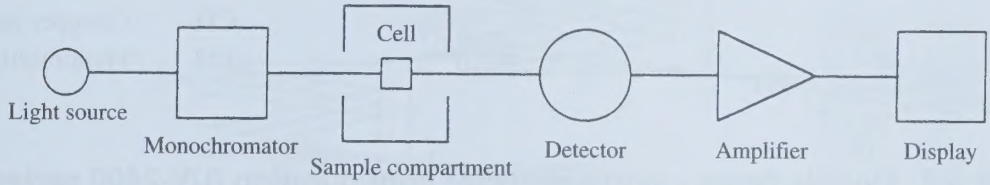

Fig. 4.8.1 Single beam configuration

- Double beam configuration

  This configuration divides the monochromatic light into two beams using mirrors such as a rotating mirror and a semi-transparent mirror so as to make two beams, the sample beam and reference beam. When the sample cell with sample in it is placed for the sample beam and the reference cell with solvent in it is placed for reference beam in the sample compartment, each transmitted light enters the detector. So, the feature of this configuration is that transmittance and absorbance can be measured once from the sample sign I and the reference sign Io at one time.

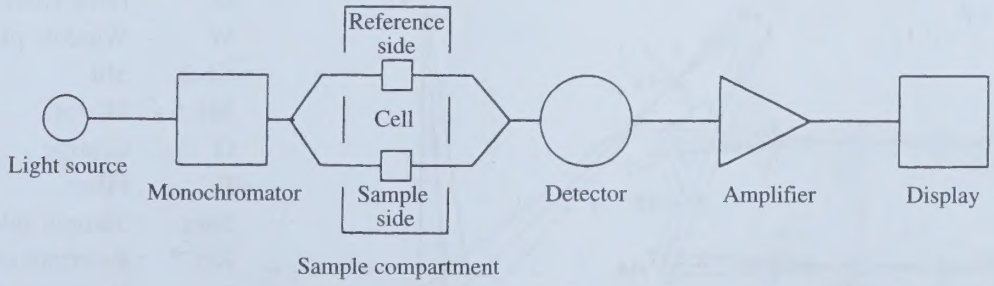

Fig. 4.8.2 Double beam configuration

4.8.2 Single and double detector configuration

- Double beam - single detector configuration

  In this configuration, sample beam and reference beam enters one detector alternatively. So, unlike double-detector configuration, it is less likely to be influenced by the difference of characteristics of two detectors.

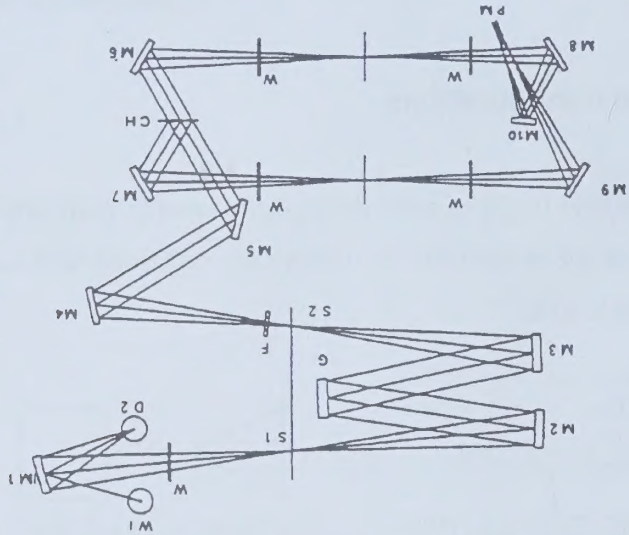

W1	: Halogen lamp
D_2	: Deuterium lamp
W	: Window plate
S1-2	: Slit
M1-10	: Mirror
G	: Grating
F	: Filter
CH	: Chopper mirror
PM	: Photomultiplier

Fig. 4.8.3 Double beam - single detector configuration (UV-2400 series)

- Double beam - double detector configuration

  In this configuration, the sample beam and the reference beam enter different detectors respectively. So, it is necessary to use two detectors with similar characteristics. The advantage of this configuration is that it is not necessary to enter two beams always in the same detector as in the case of single detector configuration, and so the large space is allowed in the sample compartment and it is convenient to measure unclear sample by having it to be tightly in contact with the light receiving surface. However, in the case of photomultiplier, this configuration is not used because matching of the detector is difficult.

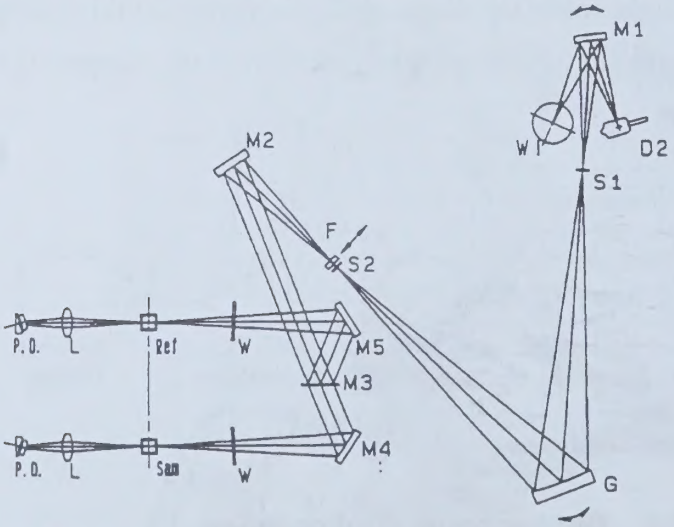

W	1: Halogen lamp
D_2	: Deuterium lamp
W	: Window plate
S1-2	: Slit
M1-5	: Mirror
G	: Grating
F	: Filter
Sam	: Sample side cell
Ref	: Reference side cell
L	: Lens
P.D.	: Photodiode

Fig. 4.8.4 Double beam - double detector configuration (UV-1700)

4.8.3 Single monochromator and double monochromator

A single monochromator has one monochromator and a double monochromator has two monochromators aligned in serial. Accordingly, if aligned in parallel like a two wavelengths spectrophotometer, it is not called double-monochromator even if it has two monochromators.

The double monochromator disperses the monochromatic light coming out from the first monochromator again by the second monochromator. So, stray light becomes extremely small and a calibration curve of good linearity as far as to absorbance 6, allowing analysis of samples with board concentration range.

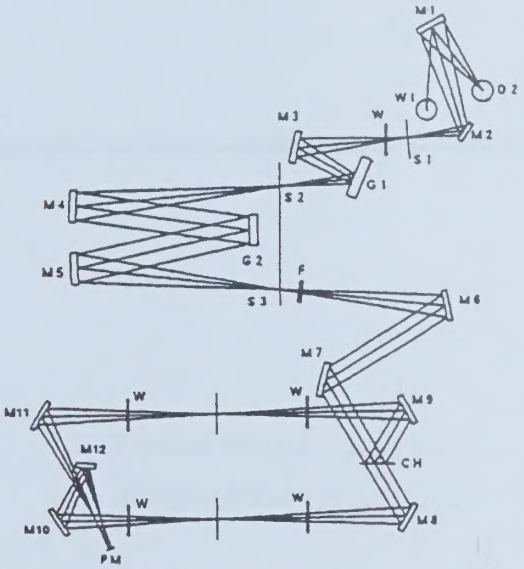

W1 : Halogen lamp
D_2 : Deuterium lamp
W : Window plate
S1-3 : Slit
M1-12 : Mirror
G1-2 : Grating
F : Filter
CH : Chopper mirror
PM : Photomultiplier

Fig. 4.8.5 Double monochromator configuration (UV-2500 series)

Chapter 5 Photometry System

CONTENTS

5.1 Optical System 5-2
5.2 Electrical System 5-4

5. 1 Optical System

A schematic of the optical system for the UV-1700 is shown in Fig. 5.1.1

D2	: Deuterium lamp	W	: Window Plate
WI	: Halogen lamp	M1~M5	: Mirrors (M3 is a half-mirror)
F	: Filter	L	: Lens
G	: Diffraction grating	Sam	: Sample cell
S1	: Entrance slit	Ref	: Reference cell
S2	: Exit slit	P.D.	: Photodiodes

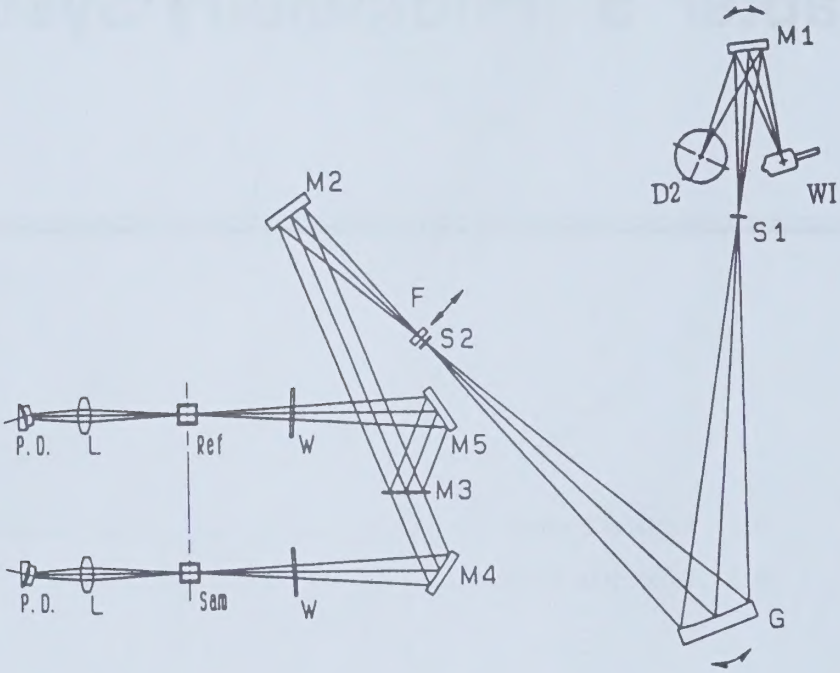

Fig. 5.1.1 Schematic of optical system

The light coming from the light source (deuterium lamp D2 or halogen lamp WI) is reflected by mirror M1 and then enters the monochromator. Light source switching is entirely automatic, with the instrument selecting the next light source according to the wavelength.

Deuterium lamp: 190nm to light source switch wavelength

Halogen lamp: Light source switch wavelength to 1100nm

The light source switch wavelength can be set anywhere in the range from 295.0 to 364.0nm (default setting: 340.8nm)

With the exception of the light sources and light source mirrors, the optical system is constructed so as to prevent exposure to dust and contaminants.

The monochromator slit aperture is fixed at 1nm.

The diffraction grating comprises a 900 line/mm aberration-correcting concave holographic grating made originally by SHIMADZU, realizing a monochromator of simple construction and with little aberration.

The light coming out of the monochromator passes through a stray light cutting filter F and strikes the mirror M2 and is the split by the half -mirror M3 into the sample-side beam and the reference-side beam, which then pass through their respective sells and strike the detectors (photodiodes).

The relationship between the positions of the cell holders and the beams is as shown in Fig. 2.5.2.

The image of the exit slit S2 appears near the cell position in the sample compartment. The cross section of the beam on the image plane is

Width approx. 0.3mm Height approx. 9mm

Whenever possible, please use black cells for the microcells, as they are minimally affected by scattered light.

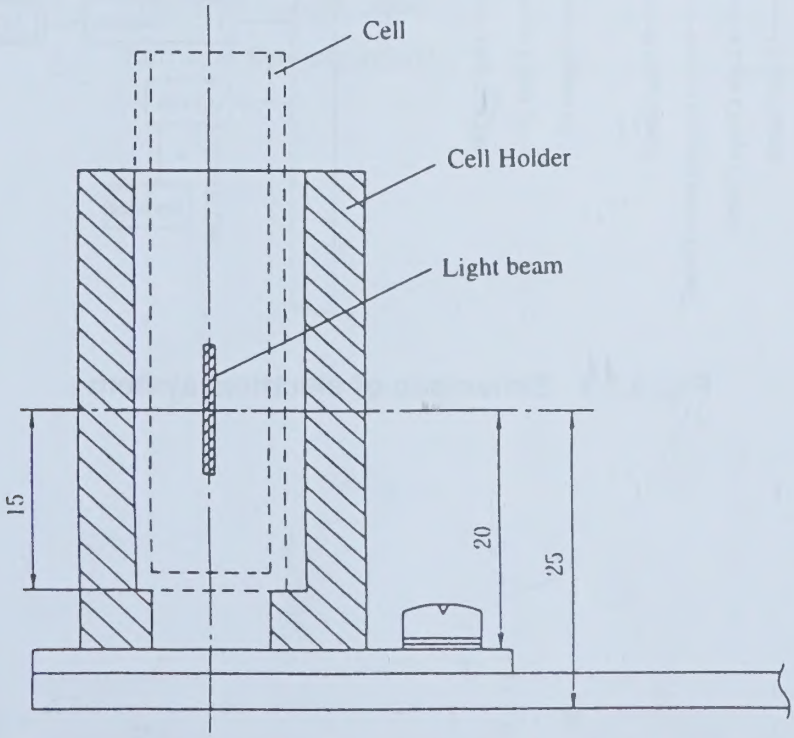

Fig. 5.1.2 Positional relationship of cell holder (cell) and light beam

5. 2 Electrical System

A schematic of the electrical system for the UV-1700 is shown in Fig. 5.2.1

The center of control is the microcomputer (CPU), which performs all controls of light sources, switching of light sources, filter switching, wavelength scanning pulse moter, LCD monitor display, keyboard and printer, RS-232C interface etc.

After the sample-side beam and reference-side beam are picked up by detectors (photodiodes) and converted into the voltage by pre-amplifier, The signal is then fed into an A/D converter and finally read by the CPU.

On energy-measurment mode (of spectrum mode) only the signal from the sample-side beam is read. In this case, S/R switching status is "Normal". If the status "Reverse", only the signal from the reference-side beam is read.

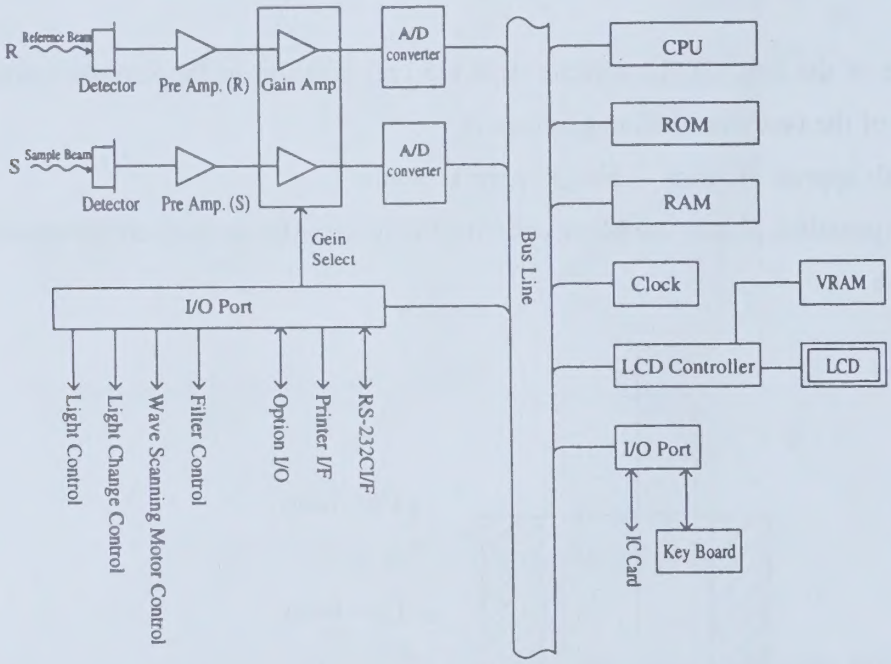

Fig. 5.2.1 Schematic of electrical system

Chapter 6 Specifications

CONTENTS

6.1 Hardware Specifications 6-2
6.2 Software Specifications 6-4

6. 1 Hardware Specifications

Measurement Wavelength Range	190~1100nm
Spectral Band Width (Resolution)	1nm or less (190 to 900nm)
Wavelength Display	0.1nm units
Wavelength Setting	0.1nm units (1nm units in scan)
Wavelength Accuracy	±0.5nm On-board automatic wavelength calibration mechanism
Wavelength Repeatability	±0.1nm
Wavelength Scanning Speeds	GOTO WL command : approx. 6000nm/min Very Fast (sampling pitch; 2.0nm) : approx. 3000nm/min Fast (sampling pitch; 1.0nm) : approx. 2000nm/min Medium (sampling pitch; 1.0nm) : approx. 260nm/min Slow (sampling pitch: 1.0nm) : approx. 190nm/min Very slow (sampling pitch: 1.0nm) : approx. 100nm/min Very slow (sampling pitch; 0.1nm) : approx. 10nm/min The above values are the speed when light source is not changed.
Sampling Interval	1.0nm (2.0mm) : 910nm ≧ λ range>500nm 0.5nm (1.0mm) : 500nm ≧ λ range>200nm 0.2nm (0.5mm) : 200nm ≧ λ range>100nm 1.0nm (2.0mm) : 100nm ≧ λ range The sampling interval inside ( ) indicates the one at "Very Fast" wavelength scanning speed (Where in,"λ range" is the difference between the measurement start wavelength and the measurement end wavelength.)
Light Source Switching	Automatic switching with wavelength range. Can be set anywhere in range from 295.0nm to 364.0nm (340.8nm is recommended)
Stray Light	0.04% or less (220nm: NaI 10g/l) 0.04% or less (340nm: $NaNo_2$ 50g/l)
Photometric System	Double beam optics
Photometric Range	Absorbance : –0.5~3.0Abs (when uncorrected baseline curve is within 0.5Abs) Transmittance : 0~300%
Recording Range	Absorbance : –3.99~3.99Abs Transmittance : –399~399%
Photometric Accuracy	±0.004Abs (at 1.0Abs) ±0.002Abs (at 0.5Abs)
Photometric repeatability	±0.002Abs (at 1.0Abs) ±0.001Abs (at 0.5Abs)

Auto Zero Function	[AUTO ZERO] key enables one-touch setting
Baseline Stability	0.001Abs/h or less (at 700nm) One hour after power is supplied, with the temperature variation of within 2°C (within the range of operating temperature)
Baseline Flatness	Within ±0.002Abs (within the range of 190nm to 200nm) Within ±0.001Abs (within the range of 200nm to 1100nm) One hour after power is supplied, within temperature change of 2°C (within the range of operating temperature)
Noise Level	P.P: 0.002Abs or less RMS: 0.0002Abs or less (at 700nm) reference value
Baseline Correction	Automatic correction using computer memory
	2-level baseline correction (High-precision instrument baseline correction function)
Light Source	20W halogen lamp (long-life 2000 hour), Deuterium lamp (socket-type), Light source position automatic adjustment mechanism Built-in lamp lighting time display function
Monochromator	Uses aberration-correcting concave blazed holographic grating
Detector	Silicon photodiode
LCD	Backlit (320×240 dot), Adjustable contrast
Sample Compartment	Interior dimensions 110×230×105 (mm) (W×D×H) (Partial depth 155mm)
Power Supply	100, 120, 220, 230, 240V±10% 50/60Hz 130VA
Dimensions	550×470×380 (200 at closing LCD unit) (mm) (W×D×H)
Required footprint	700×500 (W×D)
Weight	17kg
Operating temperature/Humidity	Temperature range: 15 to 35°C Humidity range : 35 to 80% (15°C to below 30°C) : 35 to 70% (30°C to 35°C)

6. 2 Software Specifications

Photometric	(1) Fixed-wavelength measurement: • Photometric modes: Absorbance (ABS), transmittance (%T) • Linked measurement with multicell, 8/16 micro-multicell and CPS-240 is possible. (2) Quantitation by K-factor method (3) Save/Load table data (main unit: 6pcs, data pack: 21pcs.) (4) Automatic print function: Measurement result is output to printer by every measurement. (5) Data external output function: Data is output externally from the RS-232C port at the time of measurement or data printing.
Spectrum	(1) Measurement mode: Absorbance (ABS), transmittance (%T), and energy (E) (2) Wavelength range: 190nm to 1100nm (Min. scan range: 1nm) (3) Scan speeds: Very Fast, Fast, Medium, Slow, Very slow (4) Vertical axis recording range: ABS; -3.99 to 3.99 (Min. range; -0.01 to 0.01) T%, E; -399 to 399 (Min. range; -1 to 1) (5) Scan repetitions: 1 to 99 times (6) Recording method: Overlay/Sequential selectable (7) Spectrum Data Processing Functions • Peak/Valley detection (possible up to 20pcs.) • The four rules of arithmetic (constant, between data) • Derivative processing (1 to 4 order) • Smoothing processing • Area calculation • Point-pick processing • Reduce/Expand [zoom] • Display data with cursor • Save/Load data function (main unit: 6pcs, data pack: 21pcs.) (8) External transmittance function of spectrum data: Spectrum data can be transmitted externally through RS-232C port. (9) Waveform print: Printing of waveform in A5 size is available by a printer supporting the control command ESC/P.

Quantitation	(1) Measurement method: One-wavelength quantitation, Two-wavelength/Three-wavelength quantitation, Quantitation by derivative (1 to 4 order) calculation (2) Functions regarding calibration curve Automatically calculate concentration by K-factor method Automatically calculate concentration by one-point calibration curve method Multi-point calibration curve (1 to 3 order regression calibration curve) • 1 to 3 order regression calibration curve • Number of standard samples (2 to 10) • Select pass-through-origin conditions • Calibration curve preparation by repeat measurement (1 to 9 times) and taking the average measurement value • Display of calibration curve formula • Display of relative coefficient of calibration curve (3) Measurement: Quantitation by repeat measurement (1 to 9 times) and taking the average measurement value (4) Save/Load table data function (main unit: 6pcs, data pack: 21pcs.) (5) Automatic data print function: Output measurement result to printer by every measurement. (6) Data external output function: Data is output externally from the RS-232C port at the time of measurement or data printing. (7) Special accessories • Linked measurement with multicell, 8/16 micro-multicell and CPS-240 is possible. • Sipper: linked measurement with the ASC-5 is possible
Kinetics	(1) One-wavelength kinetics • Measurement time: 1 to 6500 sec (min) • Sample temperature control (Temperature control sipper: only when TSU-2200 is used.) (2) Multi-kinetics • Linked measurement with multicell, 8/16 micro-multicell and CPS-240 is possible. (3) Two-wavelength kinetics (4) Rate-measurement (5) Save/Load curve data function (main unit: 6 pcs, data pack: 21 pcs.) (6) Output of curve data Outputs time and absorbance value by every sampling point to printer or RS-232C.

Time Scan	(1) Measurement mode: Absorbance (ABS), transmittance (%T), and energy (E) (2) Measurement time: 1 to 6500 sec/min (3) One cell measurement • Waveform data processing function • Sample temperature control (Temperature control sipper, only when TSU-2200 is used) (4) Multicell measurement • Linked measurement with multicell, 8/16 micro-multicell and CPS-240 is possible. (5) Save/Load of curve data function (6) Output of curve data Time and absorbance value per sampling point is output to the printer or RS-232C port. (7) Waveform print: Printing of waveform in A5 size is available by a printer supporting the control command ESC/P.
Multi-Component Analysis	(1) Up to 8 components (2) Pure and mixed samples of each constituent component can be used as standard samples (3) Measurement parameters and standard sample data can be stored (4) Equally spaced wavelengths or random wavelengths can be selected for measurement wavelengths (5) Quantitation can be done by calling up spectra
Multi-wavelength measurement	(1) Number of measurement wavelength: Max. 8 wavelengths (1100nm to 190nm, wavelength setting is possible by the unit of 0.1nm.) However, the same wavelength cannot be set. (2) Photometric mode: Absorbance (ABS), transmittance (T%) (3) Wavelength calculation: Calculation using photometric value is possible • Ratio and difference between the photometric values of two wavelengths, three wavelength calculation • 4 data calculation: (K1 x A1 + K2 x A2 + K3 x A3 + K4 x A4) x K5 • 4 data calculation: K5 x (K1 x A1 + K2 x A2)/(K3 x A3 + K4 x A4) * An (n = 1 to 4) indicates absorbance at the measurement wavelength of λn (n = 1 to 4) (4) Sample selection by wavelength It is possible to select sample for each wavelength for one time measurement. (5) Linking to accessory parts • Linked measurement with 6-series multicell, CPS-240, sipper 160, syringe shipper, and ASC-5 is possible. • Regarding multicell and CPS, linked measurement that selects sample for each wavelength is possible. (6) Others: • Measurement result is printed to the printer by each measurement • Data cannot be saved in the memory.

Maintenance and Inspection	(1) Instrument baseline correction function: Baseline is corrected with shorter interval than usual. • Store/Display the date of previous correction (2) Display/Reset of lamp lighting time (3) Unit validation function: • Correspond to nine items Wavelength accuracy, wavelength repeatability, spectral band width, stray light, photometric accuracy, photometric repeatability, baseline flatness, baseline stability, noise level, initialization result record. • Semi-automatic test: items requiring test jigs Test can be progressed in the form of dialog. • Full automatic test: Test is automatically performed from measurement to pass/fail judgement/ result printing. • Setting test conditions/pass fail judgement criteria When password is set, only the administrator can perform changes. • Detailed printing of the test results At the end of testing the test items, test results are output along with spectrum and time course data. • Printing of all test result The result of the previous test can be printed in a list. However, the previous time test result is cleared when this time test starts.
Common function and others	(1) Selection function of the setting conditions after power is supplied • Standby at the condition setting menu of each measurement mode • Specifying a condition file is possible (2) Backup of the previous time measurement conditions (3) Selection function of data display digits (below decimal point) • Absorbance : 3 digits/4 digits • Transmittance : 1 digit/2 digits (4) ON/OFF function of buzzer (5) Number of files that can be stored • Measurement conditions : Max. 16 files • Data : Max. 6 files (6) Screen hard copy function • Date/Function key print is selectable • Corresponding printers: HCP type, DPU type, ESC/P-24 type, and ESC/P-9 type (7) Setting of light source selection wavelength: Arbitrary in the range of 295.0nm to 364.0nm (8) S/R selection function: Sample side/Reference side is selectable.

Appendix Optional Accessories

CONTENTS

Appendix A Sample compartment (Operation of Multicell and Sipper) App-2
Appendix B Printer..... App-14
Appendix C Program Pack / Data Pack..... App-17
Appendix D List of Cells..... App-20

Appendix A Sample compartment (Operation of Multicell and Sipper)

Measurement conditions can be set by calling out the sample compartment control menu from the measurement condition setting menu using the function key.

The following items are provided as special accessories to be mounted on the sample compartment of the spectrophotometer main unit so as to link with the main unit.

1. Multicell holder

   There are multicell holder for loading 6 cells and micro-multicell holder for 8-series and 16 series cells.

2. CPS-240

   A 6-series cell holder with temperature control function

3. Sipper 160 series

   Sample is sucked into a flow cell by a peristaltic pump and then is measured.

4. Syringe sipper

   Sample is sucked into flow cell and then is measured.

For how to install each accessory part, refer to the instruction manual of each accessory part.

Also, some of the special accessories shall be mounted in the place of the cell holder at the sample compartment of the main unit and piping is required. When mounting accessory part like this, it is necessary to remove the compartment cover. For how to remove/mount the cover, refer to "A-5 How to remove/mount the sample compartment cover" in Appendix of this manual.

Appendix A-1 Multi-cell, 8/16 Micro-Multicell Sample Compartment

A multi-cell Sample Compartment, which can measure max 16 cells at once, is available as an option.

Multi-cell Holder (6 cells) (P/N 206-69160)

Micro Multi-cell Holder (P/N 206-53945-91)*

* not include 8-position or 16-position Micro Multi-cell

A-1.1 Installation Procedure

1) In case of Multi-cell

(1) Turn OFF the UV-1700 power switch.

(2) Loosen the knurled screws (2) at the front edge of the sample compartment of the unit.

(3) Lift the entire sample compartment up and pull out.

(4) Remove the slide panel from the multi-cell holder. (only Multicell)

(5) Insert the multi-cell holder connector into the socket in the back wall of the sample compartment.

(6) Firmly insert the multi-cell holder into the front of the sample compartment so that the lead edge of the multi-cell holder engages with the positioning pin at the back of the sample compartment mounting area.

(7) Press down on the multi-cell holder from the top so that the positioning on the front-bottom of the multi-cell holder inserts into the sample compartment positioning aperture.

(8) Tighten the knurled screws (2) at the front edge of the sample compartment.

(9) Mount the slide panel that was removed. (only Multicell)

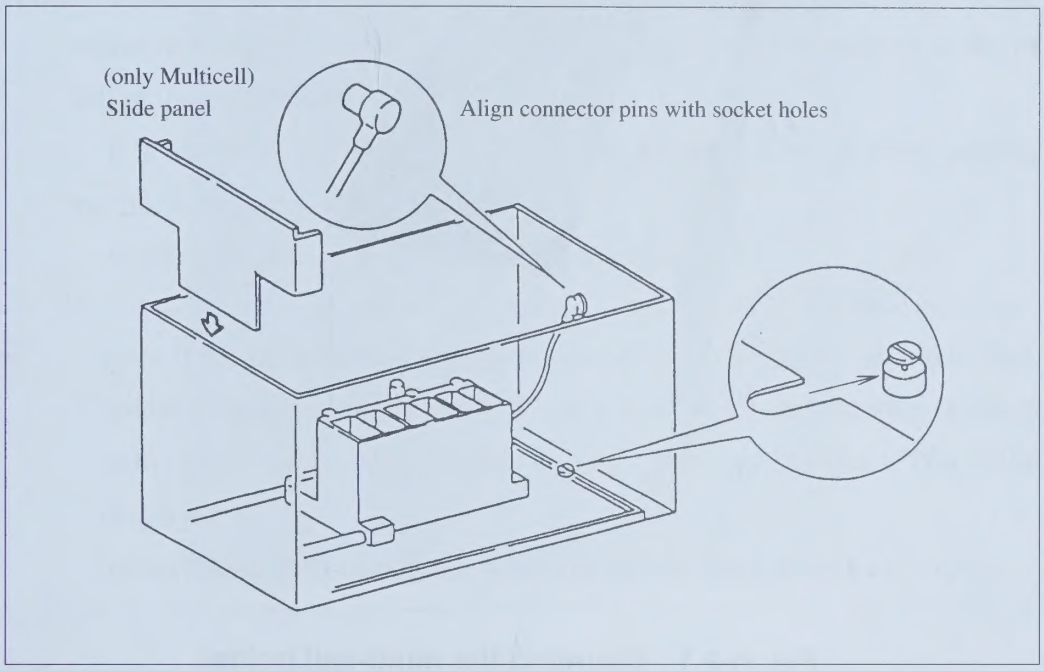

Fig. A-1.1 Mounting the multi-cell holder

(10) Turn ON the unit power switch.

(11) Check to see that the initialization process is properly completed.

(12) Press the [GOTO WL] key and set the wavelength to "530nm".

(13) Using a white piece of paper (a business card or the like), check to see that the center of the beam matches with the center of the cell position at the position of the front-most cell in the multi-cell holder. It is abnormal for the light to strike the cell holder without passing through the cell holder hole. In this case contact your Service Representative.

Note Insted of the slide panel, "Cover, Sample Compartment" can be attached to the Multi-cell Sample Compartment. Please refer to "5.5 Removing & Securing "Cover, Sample Compartment".

Caution When initialization is performed with the multicell loaded, be sure to select the loaded multicell before starting initialization. Once started, it cannot be interrupted. If a wrong multicell is selected, the multicell may be damaged.

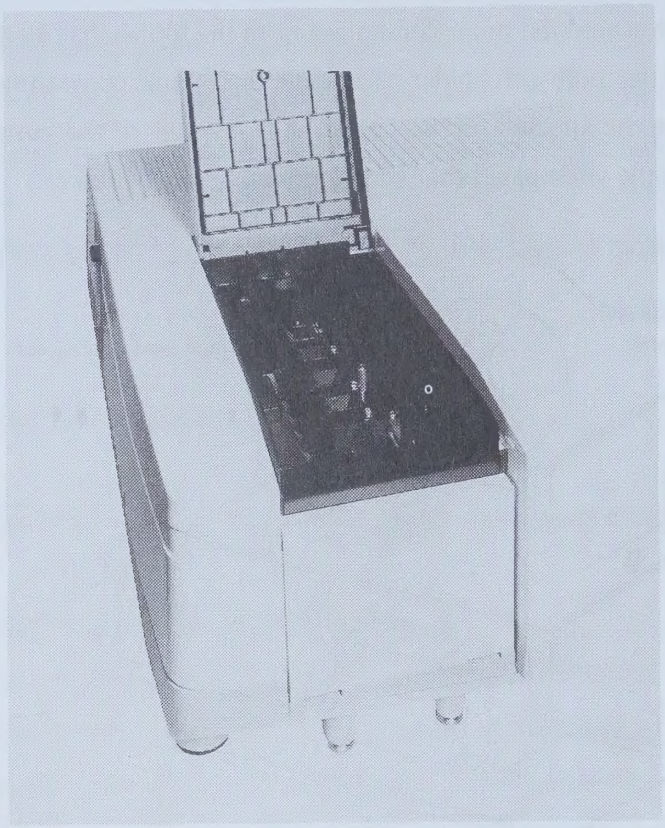

Fig. A-2.1 Mounting the multi-cell holder

2) In case of Micro-Multi-cell (8/16 Micro Multi-cell)

(1) Turn OFF the UV-1700 power switch.

(2) Loosen the knurled screw (2) at the front edge of the sample compartment of the unit.

(3) Life the entive sample compartment up and pull out.

(4) Insert the micro-multi-cell holder connector into the socket in the back wall of the sample compartment.

(5) Firmly insert the micro-multi-cell holder into the front of the sample compartment so that the lead edge of the micro-multi-cell holder engages with the positioning pin at the back of the sample compartment mounting area.

(6) Press down on the micro-multi-cell holder from the top so that the positioning on the front-bottom of the micro-multi-cell holder inserts into the sample compartment positioning aperture.

(7) Tighten the knurled screws (2) at the front edge of the sample compartment.

(8) Turn ON the unit power switch with confirming the cell holder is mounted micro multi-cell (8/16 cell).

(9) Check to see that the initialzation process is properly completed.

(10) Select "Sample Control" mode and do initialization with each cell type. An initialization of the sample compartment is started after selecting the cell type.

(11) Press the 'GOTO WL' key and set the wavelength to "530mm" after checking the initialization of attachment is completed.

(12) Using a white piece of paper (a business card or the like), check to see that the center of the beam almost matches with the center of cell position at the front-most cell in the micro-multi-cell holder.

It is abnormal for the light to strike the side wall of cell without passing through the cell hole.

In this case contact your Service Representative.

Note Even if the initialization process is completed with connecting micro-multi-cell holder to sample compartment, it is necessary to do initialization of attachment with each cell type. (In case you use micro-multi-cell holder.) "Not initialize is displayed.
Select "Sample Controll" mode and do initialization of each cell type.

A-1.2 Operating Procedure

Please refer to Chapter 15 "15.1 Multi-cell, 8/16 Micro-Multi-cell" of the Operation Guide for the operating procedure of the UV-1700 when the multi-cell or micro-multi-cell holder is installed.

Caution When initialization is performed with the multicell loaded, be sure to select the loaded multicell before starting initialization. Once started, it cannot be interrupted. If a wrong multicell is selected, the multicell may be damaged.

Appendix A-2 CPS-240A

Note Refer to CPS-240A User's Manual for detailed operation of the CPS-240A.

The CPS-240A thermoelectrically temperature controlled cell positioner is an temperature controlled cell holder for maintaining the temperature of 6 cells at a constant temperature. The CPS240A is for use with 10mm rectangular cells, but a flow cell type, the CPS-240B, is also available. The UV-1700 screen displays and this operating manual are based on the typical CPS-240A.

CPS-240A Main Specifications		
Possible number of cells	:	Sample side 6 (w/ temperature control)
		Reference side 1 (w/o temperature control)
Temperature setting range	:	16~60°C
Temperature accuracy	:	±0.5°C
Temperature control precision	:	±0.1
Ambient operating temperature	:	15~35°C

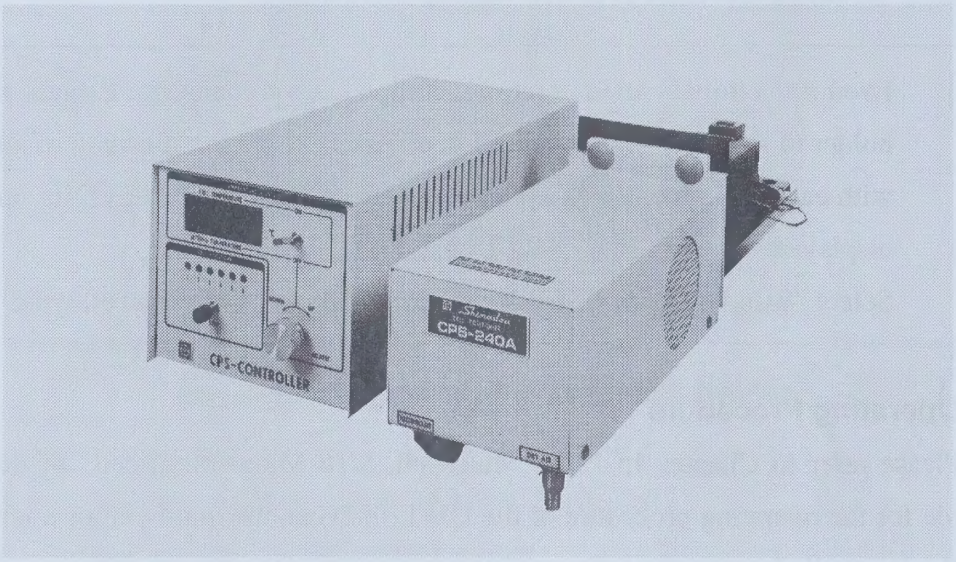

Fig. A-2.1 CPS-240A

A-2.1 Installation Procedure

(1) Turn OFF the UV-1700 power switch.

(2) Loosen the knurled screws (2) at the front edge of the sample compartment.

(3) Lift the entire sample compartment up and pull out.

(4) Insert the lead edge of the base of the CPS-240A into the positioning pin at the back of the sample compartment mounting area on the spectrometer.

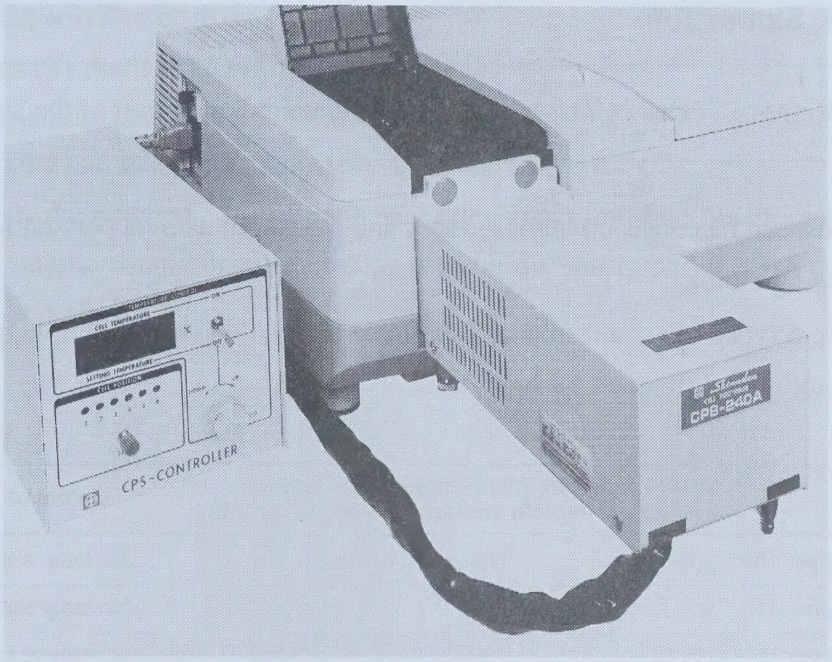

Fig. A-2.2 Installing the CPS-240A

(5) Press down on the CPS-240A from the top so that the sample compartment positioning pin on the front-bottom of the CPS-240A inserts into the sample compartment positioning hole on the unit.

(6) Tighten the knurled screws (2) beneath the front of the sample compartment.

(7) Connect the CPS-240 with the spectrophotometer according to the Fig.5.3.3

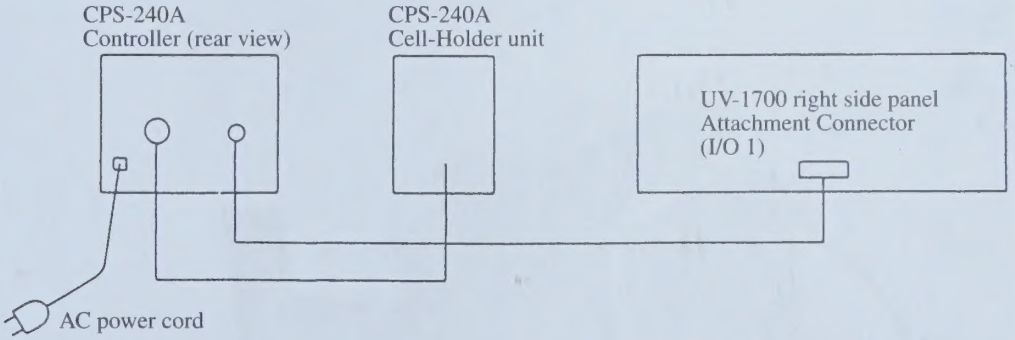

Fig. A-2.3 Connecting the CPS-240A cable

A-2.2 Operating Procedure

Please refer to Chapter 15 "15.1 Multi-cell, 8/16 Micro-Multi-cell" of the Operation Guide for the operating method of the UV-1700 when the CPS-240A is installed.

However, set <1. Sample module> in the Sample Control screen for each measurement mode to "4. CPS-240A". Also set the temperature for the CPS-240A with the CPS-240A Controller.

Please refer to the CPS-240A Operating Manual for detailed operating instructions for the CPS-240A.

Appendix A-3 Sipper 160

Note Refer to Sipper 160 User's Manual for detailed operation of the sipper unit.

Liquid samples can be consecutively aspirated and measured using a peristaltic pump which is driven by a stepping motor.

The following 5 types of sipper units are available depending on the sample quantity required and whether of not there is temperature regulator.

	Minimum required sample quantity	Standard required sample quantity	Remarks
Sipper 160 Type L	1m*l*	2m*l*	No temp reg
Sipper 160 Type T	0.8m*l*	1.5m*l*	No temp reg
Sipper 160 Type C	1.0m*l*	2.5m*l*	w/ temp reg
Sipper 160 Type U	0.3m*l*	0.5m*l*	No temp reg
TSU-2200	0.8m*l*	1.5m*l*	w/ temp reg

Sipper unit has the following two purposes.

(1) Automatic aspiration and measurement of manually loaded samples.

(2) Fully automatic measurement when linked with an auto-sample changer.

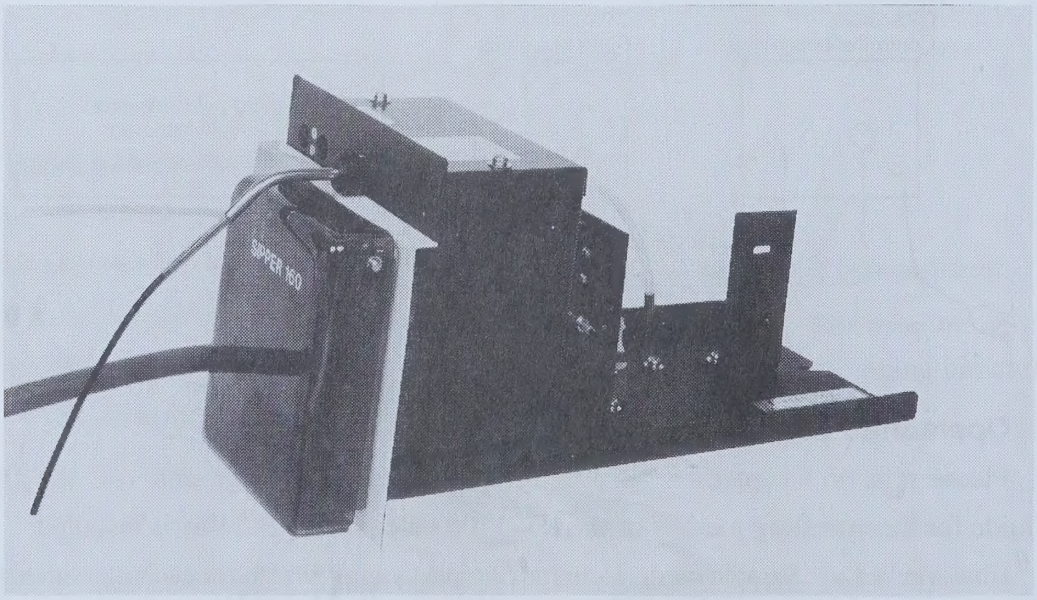

Fig. A-3.1 Sipper 160

A-3.1 Installation Procedure

(1) Turn Off the UV-1700 unit power switch.

(2) Loosen the knurled screws (2) beneath the front edge of the sample compartment.

(3) Lift the entire sample compartment up and pull out.

(4) Insert the notched edge of the base of the sipper unit into positioning pin at the back of the sample compartment mounting area on the spectrophotometer, and slide the front down into place.

Fig. A-3.2 Installing the Sipper 160

(5) Press down on the sipper unit from the top so that the sample compartment positioning pin on the front-bottom of the sipper unit fits into the positioning hole on the unit.

(6) Tighten the knurled screws (2) below the sample compartment of the unit.

(7) Securely connect the sipper unit cable to the attachment connector (I/O2) on the right side of the spectrophotometer.

A-3.2 Operating Procedure

Please refer to Chapter 15 "15.4 Sipper 160" of the Operation Guide for the operating Procedure of the UV-1700 when the sipper is installed.

Appendix A-4 Syringe sipper

Note For the detailed handling of syringe sipper, refer to the instruction manual of syringe sipper.

A syringe sipper enables continuous measurement of liquid sample by syringe pump method. The following two types of syringe sippers are provided:

Type name	P / N	Remarks
Syringe sipper type N	206-53800-93	Normal temperature type
Syringe sipper type CN	206-53800-94	Constant temperature, water circulating

As for the cells to be used with syringe sippers, the following three types of flow cells are provided:

Type name	P / N	Optical path length	Dimension of aperture	Standard required sample volume
Square flow cell (ultra-micro)	208-92114	10 mm	ϕ 2 mm	0.9 m*l*
Square flow cell (micro)	208-92113	10 mm	ϕ 3 mm	0.9 m*l*
Square flow cell (semi-micro)	208-92005	10 mm	H11 × W3.5 mm	0.9 m*l*

The liquid feed portion of the syringe sipper consists of Teflon, glass, and quartz. So, it is strong against chemicals and has excellent maintenance. It enables measurement of almost any samples. Also, automatic measurement linked with the ASC-5 (auto sample changer) is possible.

1. Installation procedure

   It is necessary to install the front plate for syringe sipper on the main unit sample compartment. Remove the front plate of the main unit sample compartment according to "A-6 How to remove/mount the sample compartment cover" in this manual.

   For installation procedure to the main unit, refer to "4. Installation".

2. How to operate

   For how to use the UV-1700 when the syringe sipper is mounted, refer to Chapter 15, "15.4 Syringe Sipper" of the main unit instruction manual (operation) or "5. Operation Method" of the syringe sipper's instruction manual.

Appendix A-5 Removing & Securing "Cover, Sample Compartment"

There are optional accessories, such as the constant temperature single cell holder (P/N 202-30858-04) and 10 mm micro flow cell (P/N 204-06222), which are mounted in place of the sample compartment's (standard) cell holder. These may also have tubing fitted to their front panel to work with the circulating water bath.

In order to mount these front panels which are equipped with tubing, it is necessary to remove the "Cover, Sample Compartment" from the standard sample compartment unit. In this case, please follow the following procedure.

A-5.1 Removing the "Cover, Sample Compartment"

(1) Turn OFF the UV-1700 unit power switch.

(2) Loosen the knurled screws (2) beneath the sample compartment on the unit.

(3) Lift the entire sample compartment up and pull out.

(4) Turn the sample compartment unit upside-down and, as shown is Fig. A-5.1, forcibly twist the "Cover, Sample Compartment" in the direction of arrows with your thumb to remove the cover.

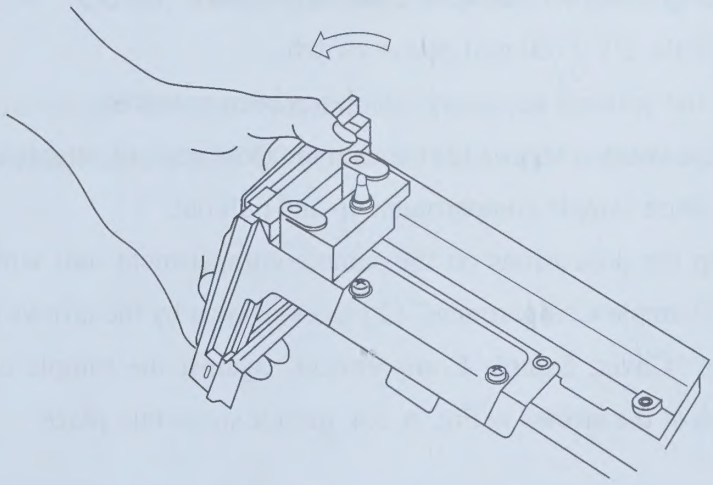

Fig. A-5.1 Removing the "Cover, Sample Compartment"

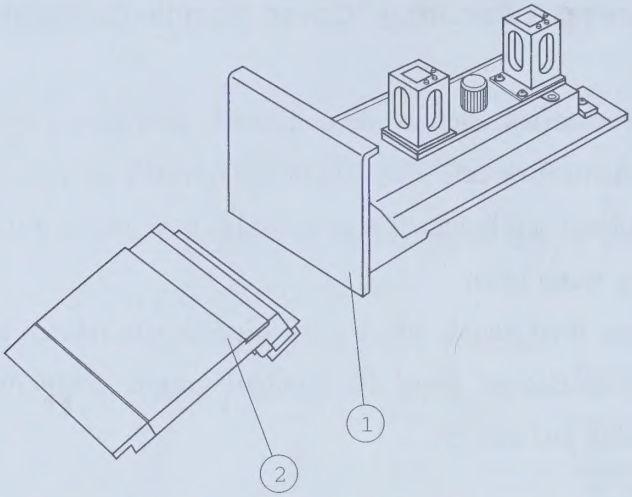

(1) Sample Compartment unit
(2) "Cover, Sample Compartment"

Fig. A-5.2 The "Cover, Sample Compartment", removed

(5) Mount the Sample Compartment on the main unit.
(6) Tighten the knurled screws (2) below the sample compartment of the unit.
(7) Install the optional accessory being mounted.

A-5.2 Securing the "Cover, Sample Compartment"

(1) Turn OFF the UV-1700 unit power switch.
(2) Remove the optional accessory which has been mounted.
(3) Loosen the knurled screws (2) beneath the front edge of sample compartment.
(4) Lift the entire sample compartment up and pull out.
(5) Match up the protrusions on the sample compartment unit with the protrusions on the "Cover, Sample Compartment" (2 places) shown by the arrows in Fig. A-5.3.
(6) Press the "Cover, Sample Compartment" against the sample compartment unit, in the direction of the arrows in Fig. A-5.4, until it snaps into place.

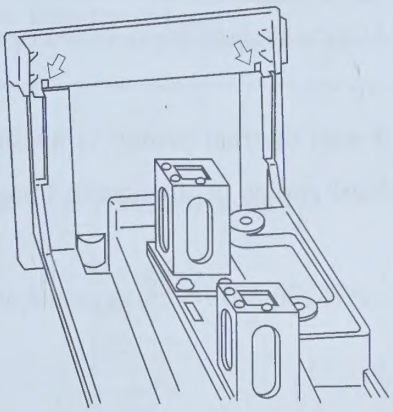

Fig. A-5.3 Mounting the "Cover, Sample Compartment"

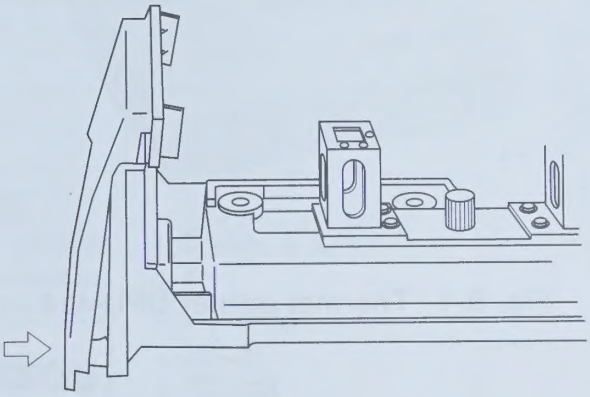

Fig. A-5.4 "Cover, Sample Compartment", mounting direction

(7) Mount the sample compartment unit on the unit.

(8) Tighten the knurled screws (2) below the front edge of the sample compartment.

Note Refer to DPU-414 User's Manual for detailed operation of the DPU-414.

The DPU-414 (P/N 206-55215-∗∗) thermal printer is available for use as the output device the UV-1700. Use this to output hard copies of the screen image or for numeric output, such as photometric values, etc.

It is also possible to use HCP-1C (P/N 206-89774-**) as an output thermal printer of the UV-1700.

Fig. B-1 Thermal printer DPU-414

1. Installation Procedure

Step	Operation, Monitor Display	Key Operation
1	Return to the Top Menu	Press the (RETURN) key until the screen changes. Then press the (MODE) key.
2	Mode 550.0nm 0.000A 1.Photometric 2.Spectrum 3.Quantitation 4.Kinetics 5.Time Scan 6.Multi-Component 7.Photometric(Multi λ) 8.Optional Program Pack 9.Utilities Input item No. Params IC Card Mainte. PC Ctrl	

Table B-1 Printer Installation Procedure

Step	Operation, Monitor Display	Key Operation
3	Select "9. Utilities"	(9)
4	Utilities 1.Start program : Standard menu 2.Data display : 4 3.S/R exchange : Standard 4.Light source : 340.8 5.Printer : ESC/P 24 (L.margin = 8) 6.Clock set : 01/02/08 20:10:35 7.D2 lamp off time: ∞ 8.Beep : ON Input item No.	
5	Select "5. Printer"	(5)
6	Utilities 1.Start program : Standard menu 2.Data display : 4 3.S/R exchange : Standard 4.Light source : 340.8 5.Printer : ESC/P 24 (L.margin = 8) 6.Clock set : 01/01/30 19:58:12 7.D2 lamp off time: ∞ 8.Beep : ON ◀▶:Cursor key Printer HCP DPU ESC/P 9 ESC/P 24	
7	Select "DPU"	
8	(Set data and Yes/No of function key print.)	

continued.

A

Optional Accessories

2. Operating Procedure

(1) Hard copy of screen : A hard copy of the screen will be printed when you press the (PRINT) key.

(2) Print using function key : When the function keys are assigned a [PRINT] function as in modes in which the measurement results are recorded in table format, as in Photometrics mode, all of the table data will be printed.

(3) Print numeric data for each measurement : When the measurement results are obtained in the form of numeric values, as in Photometrics mode, the measurement results will be automatically printed if the printer is simply connected to the unit (online status).

(4) To feed paper : Press the ON LINE switch on the printer and set it to OFF LINE (LED of "OFF LINE/PAPER END" lights up.) and press the (FEED) key. After it is used, press the ON LINE switch again to light up "ON LINE" LED.

Note IC card should be handled with care (to protect the program or data)

1. Avoid phsically extreme shock.
2. Do not try to bend.
3. Keep out of high temperature and direct sunlight.
4. Keep out of strong magnetic fields and the shock of static electricity.

C-2 Program Pack

Optional program Pack (IC card) provides optional functions to UV-1700.

- Operating procedure

(1) Firmly insert the Program Pack into the IC card slot of the right side of the spectrophotometer. (shown in Fig. C.1) The Program Pack can be inserted/removed whenever the power switch of the spectrophotometer is ON or OFF.

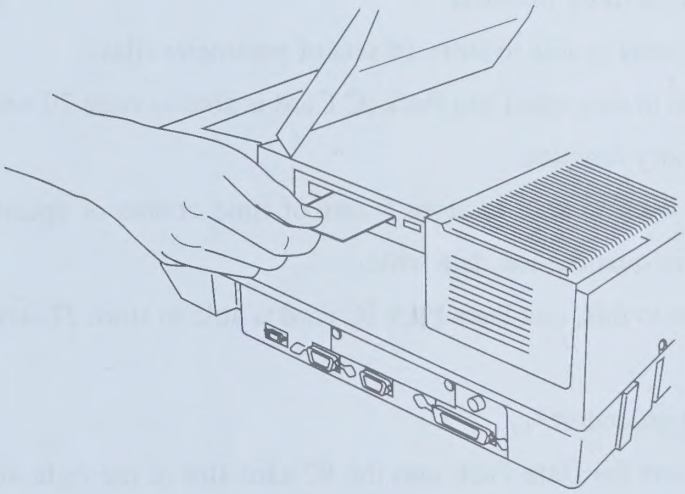

Fig.C-1 Inserting the IC card

(2) Select "7. Optional Program Pack" on the Top Menu. (shown in Fig. C-2)

The optional program inserted is automatically loaded to the spectrophotometer and its menu (or parameter setting) screen is displayed.

Please refer to Chapter 10 "Optional Program Pack" of the Operating Manual for the operating procedure of the UV-1700 with the Program Pack.

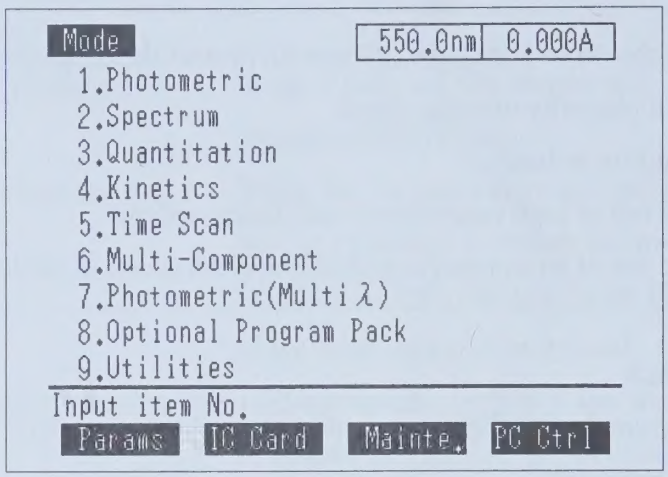

Fig.C-2 Top Menu Screen

C-2 Data Pack

The Data Pack provides 2 types of memory functions.

(1) Parameter memory function

UV-1700 itself is able to store 16 sets of parameter files.

In addition to this, one Data Pack IC Card is able to store 79 sets

(2) Data memory function

UV-1700 itself is able to store 5 sets of time course or spectral data curves, or of photometric or quantitation data table.

In addition to this, one Data Pack IC card is able to store 27 sets.

- Operating procedure

(1) Firmly insert the Data Pack into the IC card slot of the right side of the spectrophotometer. (shown in Fig. C.1) The Data Pack can be inserted/removed whenever the power switch of the spectrophotometer is ON or OFF. The stored parameters and data in the Data Pack are kept after removing from the spectrophotometer, since the Data Pack has a own battery inside.

Note Removing Data Pack from UV-1700

If the data Pack is removed from the UV-1700 while data is being written to or read from the Data Pack, data stored in the Data Pack may be destroyed. Since writing to or reading from the Data Pack is accomplished relatively quickly, perform some key operation and then allow about 2~3 seconds before removing the Data Pack from the UV-1700.

Table C-1 Consumable parts for Data Pack

Consumable parts for Data Pack (lithium batery)		
P/N	Description	Life
074-73306-22	battery, CR2025	approx. 4 years

Table D-1 List of Optional Cells

Name		shape	Quartz (S cell)	Glass (G cell)	Q'ty	Special holder
Square cell,optical length 10mm		A	200-3442	200-34565	1	Not required
Square cell, matching type		A	201-98716	200-98746	2/sets	Not required
Sealed-type square cell, optical length 10mm		B	200-34444	200-34444-01	1	Not required
Semi microcell, optical length 10mm required sample volume 1.0mL or more		C	200-66501	200-66501-01	1	Not required
Semi microcell, optical length 10mm required sample volume 1.0mL or more		D	200-66551		1	Not required
Ultra-micro black cell, optical path length: 5 mm Required sample volume: 25µl or more		K	208-92116		1	Ultra micro cell holder (206-55050-91) is req'd
Super-micro black sell, with 10mm optical path and required sample volume of 50µl more		L	200-66578-11		1	Super-micro cell holder (206-55050-91) req'd
Micro black sell, with 10mm optical path and required sample volume of 50µl more		M	200-66578-12		1	Super-micro cell holder (206-55050-91) req'd
Cylindrical cell (OD 25µ") (ID 22µ")	L (Optical.length) = 10mm	E	200-34448 (quartz window)	200-34448-01 (glass window)	1	Cylindrical cell holder (204-06216) req'd
	L = 20mm		200-34472 (quartz window)	200-34472-01 (glass window)	1	
	L = 50mm	F	200-34447-01 (quartz window)	200-34473-03 (glass window)	1	
	L = 100mm		200-34473-02 (quartz window)	200-34473-04 (glass window)	1	
Square long absorption cell	L = 20mm	G	200-34446	200-34446-01	1	Long-path rectangular cell holder (204-23118-01) req'd
	L = 50mm		200-34944	200-34944-01	1	
	L = 100mm		200-34676	200-34676-01	1	
Short optical length cell	L = 1mm	H	200-34660-01	200-34662-01	1	Short optical length cell spacer req'd
	L = 2mm		200-34655	200-34662-11	1	
	L = 5mm		200-34449	200-34449-01	1	
Spacer for short optical length cell K	for 1mm	J		204-21473-03	1	Not required
	for 2mm			204-21473-01	1	
	for 5mm			204-21473-02	1	
Micro multi-cell (8 cells) optical length 10mm and required sample volume of 100µ*l* more		N	208-92089		1	Micro multi-cell holder req'd (206-53945-91)
Micro multi-cell (16 cells) optical length 10mm and required sample volume of 100µ*l* more		P	208-92088		1	Micro multi-cell holder req'd (206-53945-91)

Name	Shape	Quartz cell (S cell)	Capacity	Optical width of cell	Special holder	Remarks
Flow cell, optical path length: 10mm	I	200-34670	1.5mL	4×36	Unnecessary, but front plate with holes is necessary	For general use Without tube
Square flow cell (ultra-micro) for syringe sipper, optical path length: 10mm Standard required sample volume: 0.9ml or more	Q	208-92114	30µl	ø2	Unnecessary	With tube
Square flow cell (micro) for syringe sipper, light path length: 10mm Standard required sample volume: 1.0ml or more	R	208-92113	80µl	ø3	Unnecessary	With tube
Square flow cell (semi-micro) for syringe sipper, light path length: 10 mm Standard required sample volume: 5.0ml or more	S	208-92005	390µl	3.5 × 11	Unnecessary	With tube

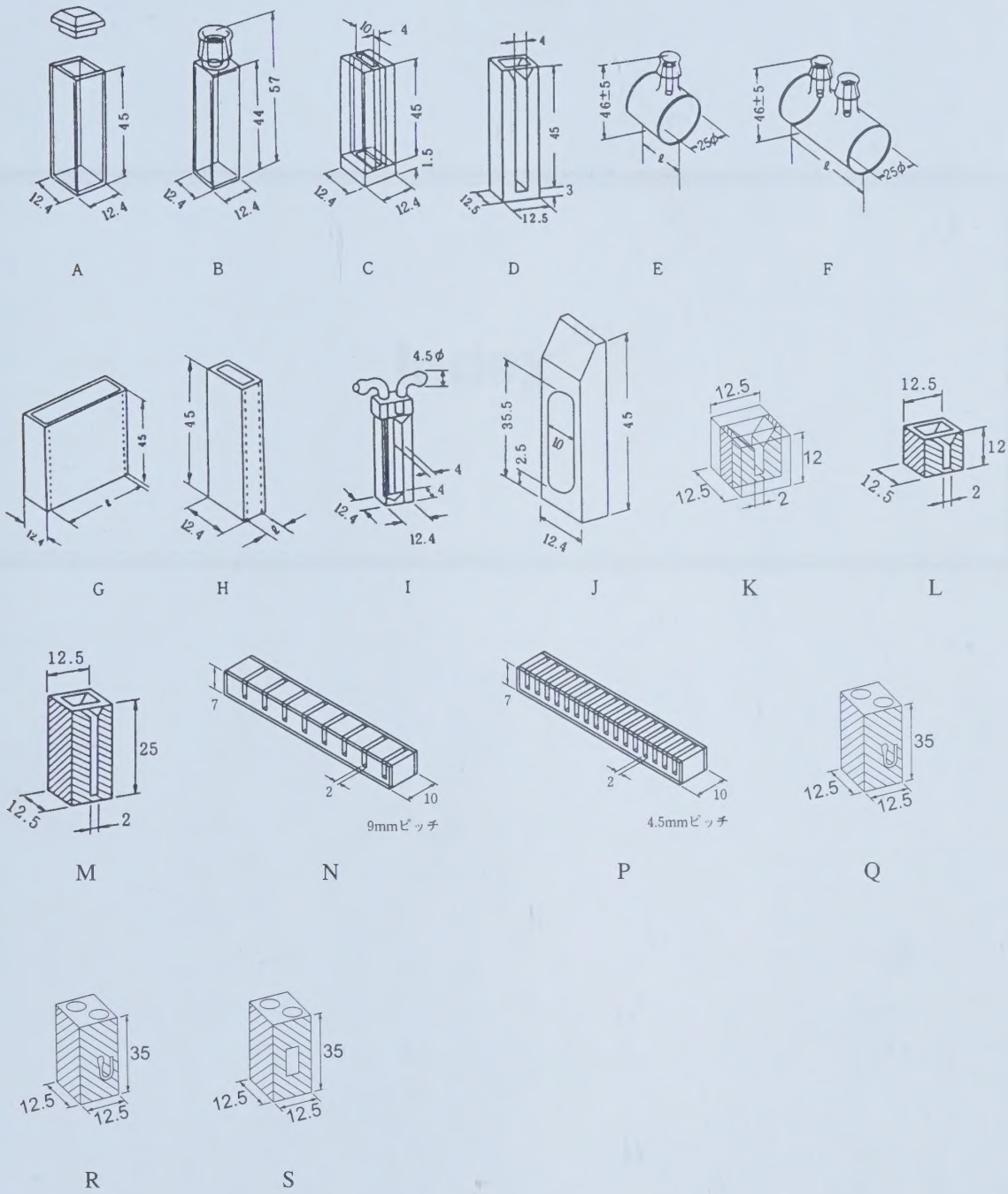

unit : mm

Fig.D-1 Optional Cell Shapes

Index

A

A/D converter 5-4
AC Power Cord 1-2
Attachment Connector (I/O 1) 2-4
Attachment Connector (I/O 2) 2-4
Attachment Connector (I/O 3) 2-4
AUTO ZERO Key 2-7

B

backup battery 3-3
Baseline Correction 6-3
Baseline Flatness 1-8, 6-3
Baseline Stability 6-3

C

CE Key 2-8
Cell Holder 2-6
Cell holder assembly 3-17
Cell Holder Set Screws 2-6
Contrast 2-5
Cover, Sample Compartment 2-6, A-11
CPS-240A A-5
Cursor Keys 2-7

D

D2 Lamp Energy 3-4
Daily Maintenance & Periodic Maintenance 3-2
Deuterium Lamp 2-9
Diffraction grating 5-2

E

Eject Button 2-5
Electrical System 5-4
ENTER Key 2-7

Entrance slit 5-2

F

Filter 5-2

Function Keys 2-7

G

GOTO WL Key 2-7

Ground 1-5

Ground Adapter 1-2

Ground Terminal 2-4

H

holographic grating 5-3

Humidity 6-3

I

IC Card A-17

IC Card Slot 2-5

Initialization & Error Display 3-3

Installation Site 1-4

Instrument Baseline Correction 3-6

K

Keyboard 2-7

L

λ Org 3-4

LCD Unit 2-2

LED 2-2

Light source compartment 2-9, 3-9

Light source cover 3-10

Light Source Org 3-4

Light Source Replacement 3-9

Light Source Specifications 3-8
Light source switch wavelength 2-9

M

measurement mode 1-8
minimum floor space required for installation 1-4
MODE Key 2-8
Multi-cell Holder Drive Connector 2-6
Multi-cell Sample Compartment A-2

N

Noise Level 6-3
Numeric Keys 2-8

P

peristaltic pump A-8
Photometric Accuracy 6-2
Photometric Range 6-2
Photometric repeatability 6-2
Positional relationship of cell holder and light 5-3
Power Connector 2-3
power consumption 1-5
Power Switch 2-3
pre-amplifier 5-4
PRINT Key 2-8
Printer A-14
Printer Connector (Centronix) 2-5

R

RAM Check 3-3
Recording Range 6-2
Replacing Fuses 3-13
RETURN Key 2-7
ROM Check 3-3

RS-232C 2-4

S

Sample Compartment 6-3
Sampling Interval 6-2
Schematic of electrical system 5-4
Schematic of optical system 5-2
Sipper A-2
Spectral Band Width 6-2
Standard Accessories 1-2
START/STOP Key 2-7
Stray Light 6-2

T

The dimensions of the UV-1700 1-4
Thermal printer A-14
Tungsten Halogen Lamp 2-9

V

Voltage Selector 1-6, 2-3

W

W Lamp Energy 3-4
Wavelength Repeatability 6-2
Wavelength Accuracy 6-2
Wavelength Display 6-2
Wavelength Range 6-2
Wavelength Scanning Speeds 6-2
Wavelength Setting 6-2
Weight 6-3
Window Plate 5-2

SHIMADZU CORPORATION

SHIMADZU CORPORATION. International Marketing Division
3. Kanda-Nishikicho 1-chome, Chiyoda-ku, Tokyo 101-8448, Japan
Phone: 81(3)3219-5641 Fax. 81(3)3219-5710
Cable Add.:SHIMADZU TOKYO

SHIMADZU SCIENTIFIC INSTRUMENTS, INC.
7102 Riverwood Drive, Columbia, Maryland 21046, U.S.A.
Phone: 1(410)381-1227 Fax. 1(410)381-1222 Toll Free: 1(800)477-1227

SHIMADZU DEUTSCHLAND GmbH
Albert-Hahn-Strasse 6-10, D-47269 Duisburg, F.R. Germany
Phone: 49(203)7687-0 Fax. 49(203)766625

SHIMADZU (ASIA PACIFIC) PTE LTD.
16 Science Park Drive #01-01 Singapore Science Park, Singapore 118227, Republic of Singapore
Phone: 65-778 6280 Fax. 65-779 2935

SHIMADZU SCIENTIFIC INSTRUMENTS (OCEANIA) PTY. LTD.
Units F, 10-16 South Street Rydalmere N.S.W. 2116, Australia
Phone: 61(2)9684-4200 Fax. 61(2)9684-4055

SHIMADZU DO BRASIL COMERCIO LTDA.
Rua Cenno Sbrighi, 25, Agua Branca, Sao Paulo, CEP 05036-010, BRAZIL
Phone: (55)11-3611-1688 Fax. (55)11-3611-2209

SHIMADZU (HONG KONG) LIMITED
Suite 1028 Ocean Center, Harbour City, Tsim Sha Tsui, Kowloon HONG KONG
Phone: (852)2375-4979 Fax. (852)2199-7438

Overseas Offices
Istanbul, Beijing, Shanghai, Guangzhou, Shenyang, Chengdu, Moscow

URL http://www.shimadzu.com